Simpa®

NİSAN 2016
FİYAT LİSTESİ

Sertifika ve Belgelerimiz
Certificates and Documents

TÜRK STANDARDLARI ENSTİTÜSÜ
TÜRK STANDARDLARINA UYGUNLUK BELGESİ
TURKISH STANDARDS INSTITUTION
CERTIFICATE OF CONFORMITY TO TURKISH STANDARDS

TÜRK STANDARDLARI ENSTİTÜSÜ
TÜRK STANDARDLARINA UYGUNLUK BELGESİ
TURKISH STANDARDS INSTITUTION
CERTIFICATE OF CONFORMITY TO TURKISH STANDARDS

SERTİFİKA

TÜV SÜD/Türkiye
Sertifikasyon Merkezi

Simpa

SIMPA ELEKTRİK MALZEMESİ SAN. VE TİC. A.Ş.
DES SANAYİ SİTESİ 105 (YAPRAK) SOK. B11 BLOK NO:16
34776 Y. DUDULLU - ÜMRANİYE- İSTANBUL
Türkiye

ELEKTRİK TERMİNAL VE BARALARININ, ELEKTRİK BAĞLANTI ELEMANLARI VE EKİPMANLARININ İMALATI VE SATIŞI

3 130515 sayılı raporlaki incelleme ile

TS EN ISO 9001: 2008

2018-09-14

ZERTİFİKAT • CERTIFICATE • СЕРТИФИКАТ • CERTIFICADO • CERTIFICAT

CERTIFICATE

The Certification Body
of TÜV SÜD/Türkiye

Simpa

SIMPA ELEKTRİK MALZEMESİ SAN. VE TİC. A.Ş.
DES SANAYİ SİTESİ 105 (YAPRAK) SOK. B11 BLOK NO:16
34776 Y. DUDULLU - ÜMRANİYE- İSTANBUL
Turkey

MANUFACTURING AND SALES OF ELECTRIC CRIMPS AND BUS BARS

TS EN ISO 9001: 2008

2018-09-14

ZERTİFİKAT • CERTIFICATE • СЕРТИФИКАТ • CERTIFICADO • CERTIFICAT

SERTİFİKA

TÜV SÜD Management Service GmbH
Sertifikasyon Merkezi

Simpa

SIMPA ELEKTRİK MALZEMESİ SAN. VE TİC. A.Ş.
DES SANAYİ SİTESİ 105 (YAPRAK) SOK. B11 BLOK NO:16
34776 Y. DUDULLU - ÜMRANİYE- İSTANBUL
Türkiye

ELEKTRİK TERMİNAL VE BARALARININ, ELEKTRİK BAĞLANTI ELEMANLARI VE EKİPMANLARININ İMALATI VE SATIŞI

ISO 9001:2008

ZERTİFİKAT • CERTIFICATE • СЕРТИФИКАТ • CERTIFICADO • CERTIFICAT

CERTIFICATE

The Certification Body
of TÜV SÜD Management Service GmbH

Simpa

SIMPA ELEKTRİK MALZEMESİ SAN. VE TİC. A.Ş.
DES SANAYİ SİTESİ 105 (YAPRAK) SOK. B11 BLOK NO:16
34776 Y. DUDULLU - ÜMRANİYE- İSTANBUL
Turkey

MANUFACTURING AND SALES OF ELECTRIC CRIMPS AND BUS BARS

ISO 9001:2008

ZERTİFİKAT • CERTIFICATE • СЕРТИФИКАТ • CERTIFICADO • CERTIFICAT

Genel Çalışma Şartlarımız

- Kataloğumuzdaki ürünlerde, herhangi bir uyarıya gerek kalmaksızın; kod, ölçü ve fiyat değişikliği yapma hakkımız saklıdır.
- Önceden anlaşmaya varılmadığı takdirde, satılan ürünler iade alınmaz.
- Nakliye ücreti alıcıya aittir.
- Fiyatlarımıza K.D.V. dahil değildir.

Trade Policies

- We reserve the rights to change the codes, the measurements and the prices of catalog products, without any warning.
- Return is not possible without prior agreement.
- Consignment charge belongs to the buyer.
- Vat Tax is not included in our prices, it's additional.

Örnek Referans Modeli / Basic Reference Model

Kablo Pabucu Tipi / Type of Cable Lug /	Kablo Kesiti (mm2) - Civata Ölçüsü (metrik) / Cable Section (mm2) - Bolt Size (metric) /	Standart Civata Deliği Standard Bolt Hole
SKP -A	150-M12	SD

İÇİNDEKİLER
INDEX

SKP-K / SIKMALI KABLO PABUCU
SKP-K / TUBULAR CABLE LUGS 6

SKP-A / SIKMALI KABLO PABUCU
SKP-A / TUBULAR CABLE LUGS 7

SKP-S / SIKMALI KABLO PABUCU
SKP-S / TUBULAR CABLE LUGS 9

SKP-S/GD / SIKMALI KABLO PABUCU GÖZLEM DELİKLİ
SKP-S/GD / TUBULAR CABLE LUGS WITH INSPECTION HOLE 11

SKP-S1 / SIKMALI KABLO PABUCU
SKP-S1 / TUBULAR CABLE LUGS 12

SKP-S2 / SIKMALI KABLO PABUCU
SKP-S2 / TUBULAR CABLE LUGS 14

SKP-S3 / SIKMALI KABLO PABUCU
SKP-S3 / TUBULAR CABLE LUGS 16

SKP-D / SIKMALI KABLO PABUCU
SKP-D / TUBULAR CABLE LUGS 18

SKP-DG / SIKMALI KABLO PABUCU
SKP-DG / TUBULAR CABLE LUGS 20

SKP-L45S / SKP-L90S SIKMALI KABLO PABUCU
SKP-L45S / SKP-L90S TUBULAR CABLE LUGS 21

SKP-L90 / SKP-L45 SIKMALI KABLO PABUCU
SKP-L90 / SKP-L45 TUBULAR CABLE LUGS 22-25

SKP-C / SIKMALI KABLO PABUCU
SKP-C / TUBULAR CABLE LUGS 26

SEM-A / SEM-D SIKMALI EK MUFLARI
SEM-A / BUTT CONNECTORS 28

SKP-D1 / KAYNAKLI TİP KABLO PABUCU
SKP-D1 / WELDED TUBE TERMINALS 29

AKP-D / ALÜMİNYUM KABLO PABUCU
AKP-D / ALUMINIUM CABLE LUG 31

AKP-DY / ALÜMİNYUM KABLO PABUCU OKSİT KORUMA YAĞLI
AKP-DY / ALUMINIUM CABLE LUGS WITH OXIDE PROTECTION OIL 32

AKP-DK / ALÜMİNYUM KABLO PABUCU KALAY KAPLI VE OKSİT KORUMA YAĞLI
AKP-DK / ALUMINIUM CABLE LUGS TIN PLATED & WITH OXIDE PROTECTION OIL 33

AEM-D / ALÜMİNYUM SIKMALI EK MUFLARI
AEM-D / ALUMINIUM BUTT CONNECTORS 34

İÇİNDEKİLER
INDEX

BKP-D / BİMETAL KABLO PABUÇLARI
BKP-D / BIMETALLIC CABLE LUGS
35

BEM-D / BİMETAL EK MUFLARI
BEM-D / BIMETALLIC BUTT CONNECTORS
36

İZOLELİ / İZOLESİZ BARALAR
INSULATED / NON-INSULATED BUSBARS
37-40

IKY / KY / İZOLELİ-İZOLESİZ KABLO YÜKSÜKLERİ
IKY / KY / INSULATED - NON-INSULATED CABLE END-SLEEVES
41

IKY/2 / İZOLELİ ÇİFT GİRİŞLİ KABLO YÜKSÜKLERİ
IKY/2 / INSULATED TWIN CABLE END-SLEEVE
42

SP-YK / İZOLELİ YUVARLAK TİP KABLO PABUÇLARI
SP-YK / INSULATED RING TYPE TERMINALS
43

SP-CK / İZOLELİ ÇATAL TİP KABLO PABUÇLARI
SP-CK / INSULATED FORK TYPE TERMINALS
44

SP-IK / İZOLELİ İĞNE TİP KABLO UÇLARI
SP-IK / INSULATED PIN CONNECTORS
45

SP-FD / İZOLELİ DİŞİ FASTON TİP KABLO UÇLARI
SP-FD / INSULATED RECEPTACLES
46

SP-FE / İZOLELİ ERKEK FASTON TİP KABLO UÇLARI
SP-FD / INSULATED TABS
47

SP-IFD / SP-FEG / İZOLELİ FASTON TİP KABLO UÇLARI
SP-IFD / SP-FEG / INSULATED RECEPTACLES
48

SP-ET / SP-DT / İZOLELİ ERKEK KABLO TERMİNALLERİ
ET / SP-DT / INSULATED BULLET CONNECTORS
49

SP-IEM / SP-IBU / İZOLELİ EK MUFLARI
SP-IEM / SP-IBU / INSULATED BUTT CONNECTORS
50

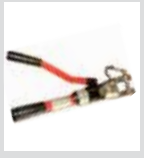

KSP - HSP - ASP / SIKMA PENSLERİ
KSP - HSP - ASP / CRIMPING TOOLS
51-53

SKP-K

EKONOMİK TİP SIKMALI KABLO PABUCU
TUBULAR CABLE LUGS

(TAM BOYLARI STANDART TİP KABLO PABUÇLARI ÖLÇÜSÜNDEDİR.)

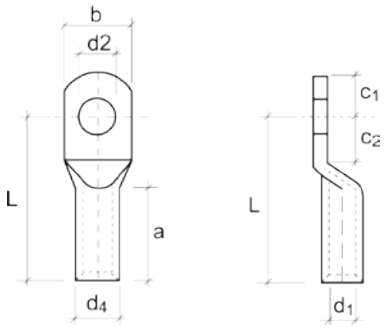

*5846 sayılı yasa gereği fotoğrafların izinsiz yayınlanması ve kullanılması kesinlikle yasaktır.

ÜRÜN KODU Order Code	KABLO KESİTİ (mm²) Cable Section (mm²)	CIVATA DELİĞİ Bolt	BOYUTLAR Dimensions d1	d4	a	d2	b	c1	c2	L	KUTU ADEDİ Box Pcs.	KUTU AĞIRLIĞI Box Weight	BİRİM FİYATI TL Unit Price TL
SKP-K/016-M05	16	M5	5,5	7,0	12,5	5,5	10,5	7,5	7,5	24,0	500	~ 2,0 kg.	0,40
SKP-K/016-M06/SD		**M6**	**5,5**	**7,0**	**12,5**	**6,5**	**10,5**	**7,5**	**7,5**	**24,0**	**500**	**~ 2,0 kg.**	**0,35**
SKP-K/025-M05	25	M5	7,0	9,0	17,5	5,5	14,0	8,5	8,5	30,5	300	~ 2,4 kg.	0,75
SKP-K/025-M06		M6	7,0	9,0	17,5	6,5	14,0	8,5	8,5	30,5	300	~ 2,4 kg.	0,75
SKP-K/025-M08/SD		**M8**	**7,0**	**9,0**	**17,5**	**8,5**	**14,0**	**8,5**	**8,5**	**30,5**	**300**	**~ 2,4 kg.**	**0,70**
SKP-K/035-M06	35	M6	8,5	10,5	18,5	6,5	15,5	9,5	9,5	34,0	200	~ 2,2 kg.	1,15
SKP-K/035-M08/SD		**M8**	**8,5**	**10,5**	**18,5**	**8,5**	**15,5**	**9,5**	**9,5**	**34,0**	**200**	**~ 2,2 kg.**	**1,10**
SKP-K/050-M06	50	M6	10,0	12,0	20,0	6,5	18,0	11,0	11,0	39,5	125	~ 1,8 kg.	1,40
SKP-K/050-M08		M8	10,0	12,0	20,0	8,5	18,0	11,0	11,0	39,5	125	~ 1,9 kg.	1,40
SKP-K/050-M10/SD		**M10**	**10,0**	**12,0**	**20,0**	**10,5**	**18,0**	**11,0**	**11,0**	**39,5**	**125**	**~ 1,8 kg.**	**1,30**
SKP-K/070-M06	70	M6	11,5	14,0	22,0	6,5	21,0	11,0	11,0	42,0	80	~ 1,8 kg.	2,15
SKP-K/070-M08		M8	11,5	14,0	22,0	8,5	21,0	11,0	11,0	42,0	80	~ 1,8 kg.	2,15
SKP-K/070-M10/SD		**M10**	**11,5**	**14,0**	**22,0**	**10,5**	**21,0**	**11,0**	**11,0**	**42,0**	**80**	**~ 1,8 kg.**	**2,05**
SKP-K/095-M08	95	M8	13,5	16,0	25,0	8,5	24,5	12,5	12,5	48,0	60	~ 1,8 kg.	2,65
SKP-K/095-M10		M10	13,5	16,0	25,0	10,5	24,5	12,5	12,5	48,0	60	~ 1,9 kg.	2,50
SKP-K/095-M12/SD		**M12**	**13,5**	**16,0**	**25,0**	**13,0**	**24,5**	**12,5**	**12,5**	**48,0**	**60**	**~ 1,8 kg.**	**2,50**
SKP-K/120-M08	120	M8	15,5	18,0	27,0	8,5	27,0	14,0	14,0	52,0	50	~ 1,8 kg.	3,35
SKP-K/120-M10		M10	15,5	18,0	27,0	10,5	27,0	14,0	14,0	52,0	50	~ 1,8 kg.	3,35
SKP-K/120-M12/SD		**M12**	**15,5**	**18,0**	**27,0**	**13,0**	**27,0**	**14,0**	**14,0**	**52,0**	**50**	**~ 1,8 kg.**	**3,20**
SKP-K/150-M08	150	M8	16,5	20,0	29,0	8,5	29,0	14,0	14,0	54,5	35	~ 2,0 kg.	5,35
SKP-K/150-M10		M10	16,5	20,0	29,0	10,5	29,0	14,0	14,0	54,5	35	~ 2,0 kg.	5,35
SKP-K/150-M12/SD		**M12**	**16,5**	**20,0**	**29,0**	**13,0**	**29,0**	**14,0**	**14,0**	**54,5**	**35**	**~ 2,0 kg.**	**5,15**
SKP-K/185-M10	185	M10	18,5	22,0	32,0	10,5	32,0	14,5	14,5	61,5	25	~ 1,8 kg.	6,00
SKP-K/185-M12/SD		**M12**	**18,5**	**22,0**	**32,0**	**13,0**	**32,0**	**14,5**	**14,5**	**61,5**	**25**	**~ 1,8 kg.**	**5,70**
SKP-K/240-M10	240	M10	21,5	25,5	36,5	10,5	37,5	16,0	16,0	69,0	20	~ 2,2 kg.	8,30
SKP-K/240-M12/SD		**M12**	**21,5**	**25,5**	**36,5**	**13,0**	**37,5**	**16,0**	**16,0**	**69,0**	**20**	**~ 2,2 kg.**	**8,00**

SKP-K Özellikleri

Hammadde	:	**EN 13600 Bakır Boru**
Material	:	Electrolytic Copper Conformed To EN 13600
Kaplama	:	**Kalay**
Coating	:	Tin Plated
Bağlantı	:	**Sıkma**
Joint	:	Clamp Coupling
Boru Et Kalınlığı	:	**Orta**
Thickness	:	Medium
Kablo Girişi	:	**Normal**
Cable Entry	:	Standard

Bu tabloda koyu yazı karakteri ile belirtilmiş olan kablo pabuçları standart üretimimizdir.

The cable lugs which are indicated in bold font, are standart products of Simpa

SKP-A SIKMALI KABLO PABUCU
TUBULAR CABLE LUGS

*5846 sayılı yasa gereği fotoğrafların izinsiz yayınlanması ve kullanılması kesinlikle yasaktır.

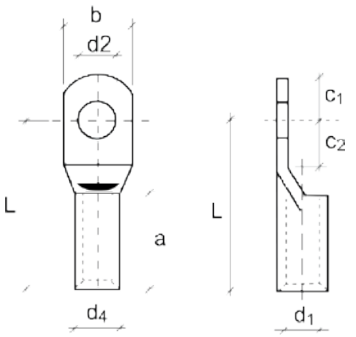

ÜRÜN KODU Order Code	KABLO KESİTİ (mm²) Cable Section (mm²)	CIVATA DELİĞİ Bolt	BOYUTLAR Dimensions								KUTU ADEDİ Box Pcs.	KUTU AĞIRLIĞI Box Weight	BİRİM FİYATI TL Unit Price TL
			d1	d4	a	d2	b	c1	c2	L			
SKP-A/006-M04	6	M4	4,0	5,5	9,5	4,3	9,0	6,5	6,5	18,0	1.000	~ 2,2 kg.	0,35
SKP-A/006-M05/SD		**M5**	**4,0**	**5,5**	**9,5**	**5,3**	**9,0**	**6,5**	**6,5**	**18,0**	**1.000**	**~ 2,2 kg.**	**0,35**
SKP-A/010-M04	10	M4	4,5	6,0	11,5	4,3	9,0	7,0	7,0	20,0	800	~ 2,2 kg.	0,40
SKP-A/010-M05/SD		**M5**	**4,5**	**6,0**	**11,5**	**5,3**	**9,0**	**7,0**	**7,0**	**20,0**	**800**	**~ 2,2 kg.**	**0,37**
SKP-A/016-M05	16	M5	5,5	7,5	13,0	5,3	11,5	7,5	7,5	23,5	400	~ 2,1 kg.	0,58
SKP-A/016-M06/SD		**M6**	**5,5**	**7,5**	**13,0**	**6,5**	**11,5**	**7,5**	**7,5**	**23,5**	**400**	**~ 2,1 kg.**	**0,55**
SKP-A/025-M05	25	M5	7,0	9,5	17,5	5,3	14,0	8,5	8,5	28,5	300	~ 2,7 kg.	1,00
SKP-A/025-M06		M6	7,0	9,5	17,5	6,5	14,0	8,5	8,5	28,5	300	~ 2,7 kg.	1,00
SKP-A/025-M08/SD		**M8**	**7,0**	**9,5**	**17,5**	**8,5**	**14,0**	**8,5**	**8,5**	**28,5**	**300**	**~ 2,7 kg.**	**0,90**
SKP-A/035-M06	35	M6	8,5	11,0	19,5	6,5	16,5	9,5	9,5	33,0	200	~ 2,6 kg.	1,30
SKP-A/035-M08/SD		**M8**	**8,5**	**11,0**	**19,5**	**8,5**	**16,5**	**9,5**	**9,5**	**33,0**	**200**	**~ 2,7 kg.**	**1,20**
SKP-A/035-M10		M10	8,5	11,0	19,5	10,5	16,5	10,0	10,0	33,0	200	~ 2,5 kg.	1,30
SKP-A/050-M06	50	M6	10,0	13,0	21,0	6,5	19,0	11,0	11,0	37,5	125	~ 2,6 kg.	2,10
SKP-A/050-M08		M8	10,0	13,0	21,0	8,5	19,0	11,0	11,0	37,5	125	~ 2,8 kg.	2,10
SKP-A/050-M10/SD		**M10**	**10,0**	**13,0**	**21,0**	**10,5**	**19,0**	**11,0**	**11,0**	**37,5**	**125**	**~ 2,6 kg.**	**2,00**
SKP-A/050-M12		M12	10,0	13,0	21,0	13,0	19,0	11,0	11,0	37,5	125	~ 2,5 kg.	2,10
SKP-A/070-M06	70	M6	11,5	14,5	24,0	6,5	21,0	11,0	11,0	40,0	80	~ 2,2 kg.	2,70
SKP-A/070-M08		M8	11,5	14,5	24,0	8,5	21,0	11,0	11,0	40,0	80	~ 2,1 kg.	2,60
SKP-A/070-M10/SD		**M10**	**11,5**	**14,5**	**24,0**	**10,5**	**21,0**	**11,0**	**11,0**	**40,0**	**80**	**~ 2,0 kg.**	**2,60**
SKP-A/070-M12		M12	11,5	14,5	24,0	13,0	21,0	11,0	11,0	40,0	80	~ 1,9 kg.	2,75
SKP-A/070-M14		M14	11,5	14,5	24,0	14,5	21,0	11,0	11,0	40,0	80	~ 1,9 kg.	3,45
SKP-A/095-M08	95	M8	13,5	16,5	27,0	8,5	24,0	12,5	12,5	45,5	60	~ 2,3 kg.	3,10
SKP-A/095-M10		M10	13,5	16,5	27,0	10,5	24,0	12,5	12,5	45,5	60	~ 2,3 kg.	2,90
SKP-A/095-M12/SD		**M12**	**13,5**	**16,5**	**27,0**	**13,0**	**24,0**	**12,5**	**12,5**	**45,5**	**60**	**~ 1,8 kg.**	**2,90**
SKP-A/095-M14		M14	13,5	16,5	27,0	14,5	24,0	12,5	12,5	45,5	60	~ 1,8 kg.	4,00
SKP-A/095-M16		M16	13,5	16,5	27,0	16,5	24,0	12,5	12,5	45,5	50	~ 1,8 kg.	4,00
SKP-A/120-M08	120	M8	14,5	18,0	30,0	8,5	26,5	14,0	14,0	50,5	50	~ 2,4 kg.	4,20
SKP-A/120-M10		M10	14,5	18,0	30,0	10,5	26,5	14,0	14,0	50,5	50	~ 2,4 kg.	4,20
SKP-A/120-M12/SD		**M12**	**14,5**	**18,0**	**30,0**	**13,0**	**26,5**	**14,0**	**14,0**	**50,5**	**50**	**~ 2,4 kg.**	**4,20**
SKP-A/120-M14		M14	14,5	18,0	30,0	14,5	26,5	14,0	14,0	50,5	50	~ 2,3 kg.	4,30
SKP-A/120-M16		M16	14,5	18,0	30,0	16,5	26,5	14,0	14,0	50,5	50	~ 2,3 kg.	4,30

ÜRÜN KODU Order Code	KABLO KESİTİ (mm²) Cable Section (mm²)	CIVATA DELİĞİ Bolt	BOYUTLAR Dimensions								KUTU ADEDİ Box Pcs.	KUTU AĞIRLIĞI Box Weight	BİRİM FİYATI TL Unit Price TL
			d1	d4	a	d2	b	c1	c2	L			
SKP-A/150-M08	150	M8	16,5	21,0	31,5	8,5	30,5	15,0	15,0	54,5	30	~ 2,4 kg.	6,80
SKP-A/150-M10		M10	16,5	21,0	31,5	10,5	30,5	15,0	15,0	54,5	30	~ 2,4 kg.	6,80
SKP-A/150-M12/SD		**M12**	**16,5**	**21,0**	**31,5**	**13,0**	**30,5**	**15,0**	**15,0**	**54,5**	**30**	**~ 2,3 kg.**	**6,50**
SKP-A/150-M14		M14	16,5	21,0	31,5	14,5	30,5	15,0	15,0	54,5	30	~ 2,3 kg.	6,50
SKP-A/150-M16		M16	16,5	21,0	31,5	16,5	30,5	15,0	15,0	54,5	30	~ 2,2 kg.	6,90
SKP-A/150-M20		M20	16,5	21,0	31,5	21,0	30,5	15,0	15,0	54,5	30	~ 2,1 kg.	6,90
SKP-A/185-M10	185	M10	18,5	23,0	34,5	10,5	33,5	16,0	16,0	61,0	20	~ 1,9 kg.	7,90
SKP-A/185-M12/SD		**M12**	**18,5**	**23,0**	**34,5**	**13,0**	**33,5**	**16,0**	**16,0**	**61,0**	**20**	**~ 1,9 kg.**	**7,70**
SKP-A/185-M14		M14	18,5	23,0	34,5	14,5	33,5	16,0	16,0	61,0	20	~ 1,8 kg.	7,70
SKP-A/185-M16		M16	18,5	23,0	34,5	16,5	33,5	16,0	16,0	61,0	20	~ 1,8 kg.	7,70
SKP-A/185-M20		M20	18,5	23,0	34,5	21,0	33,5	16,0	16,0	61,0	20	~ 1,7 kg.	7,90
SKP-A/240-M10	240	M10	21,0	26,0	39,0	10,5	38,0	16,5	16,5	65,5	20	~ 2,5 kg.	10,80
SKP-A/240-M12/SD		**M12**	**21,0**	**26,0**	**39,0**	**13,0**	**38,0**	**16,5**	**16,5**	**65,5**	**20**	**~ 2,5 kg.**	**10,60**
SKP-A/240-M14		M14	21,0	26,0	39,0	14,5	38,0	16,5	16,5	65,5	20	~ 2,5 kg.	10,60
SKP-A/240-M16		M16	21,0	26,0	39,0	16,5	38,0	16,5	16,5	65,5	20	~ 2,4 kg.	10,60
SKP-A/240-M20		M20	21,0	26,0	39,0	21,0	38,0	16,5	16,5	65,5	20	~ 2,4 kg.	10,80
SKP-A/300-M12	300	M12	23,5	28,5	42,5	13,0	42,0	19,0	22,0	77,0	16	~ 2,6 kg.	13,20
SKP-A/300-M14		M14	23,5	28,5	42,5	14,5	42,0	19,0	22,0	77,0	16	~ 2,6 kg.	13,20
SKP-A/300-M16/SD		**M16**	**23,5**	**28,5**	**42,5**	**17,0**	**42,0**	**19,0**	**22,0**	**77,0**	**16**	**~ 2,6 kg.**	**13,20**
SKP-A/300-M20		M20	23,5	28,5	42,5	21,0	42,0	19,0	22,0	77,0	16	~ 2,5 kg.	13,20
SKP-A/400-M12	400	M12	27,0	33,0	47,0	13,0	48,0	20,0	20,0	84,0	6		22,00
SKP-A/400-M14		M14	27,0	33,0	47,0	15,0	48,0	20,0	20,0	84,0	6		22,00
SKP-A/400-M16/SD		**M16**	**27,0**	**33,0**	**47,0**	**17,0**	**48,0**	**20,0**	**20,0**	**84,0**	**6**		**22,00**
SKP-A/400-M20		M20	27,0	33,0	47,0	21,0	48,0	20,0	20,0	84,0	6		24,00

SKP-A Özellikleri

Hammadde Material	: :	**EN 13600 Bakır Boru** Electrolytic Copper Conformed To EN 13600
Kaplama Coating	: :	**Kalay** Tin Plated
Bağlantı Joint	: :	**Sıkma veya Lehim** Clamp Coupling or Solder
Boru Et Kalınlığı Thickness	: :	**Kalın** Thick
Kablo Girişi Cable Entry	: :	**Normal** Standard

Bu tabloda koyu yazı karakteri ile belirtilmiş olan kablo pabuçları standart üretimimizdir.

The cable lugs which are indicated in bolt font, are standart products of Simpa

SKP-S SIKMALI KABLO PABUCU
TUBULAR CABLE LUGS

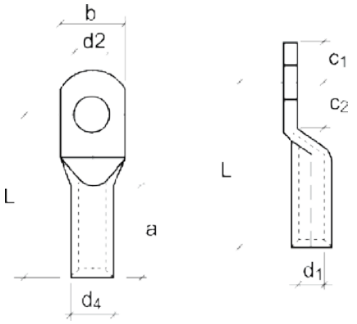

*5846 sayılı yasa gereği fotoğrafların izinsiz yayınlanması ve kullanılması kesinlikle yasaktır.

ÜRÜN KODU Order Code	KABLO KESİTİ (mm²) Cable Section (mm²)	CIVATA DELİĞİ Bolt	BOYUTLAR Dimensions								KUTU ADEDİ Box Pcs.	KUTU AĞIRLIĞI Box Weight	BİRİM FİYATI TL Unit Price TL
			d1	d4	a	d2	b	c1	c2	L			
SKP-S/006-M04	6	M4	4,0	5,5	9,5	4,3	9,0	6,5	6,5	19,0	1.000	~ 2,3 kg.	0,40
SKP-S/006-M05/SD		**M5**	**4,0**	**5,5**	**9,5**	**5,3**	**9,0**	**6,5**	**6,5**	**19,0**	**1.000**	**~ 2,2 kg.**	**0,40**
SKP-S/006-M06		M6	4,0	6,0	11,0	6,4	10,5	7,0	7,0	21,0	700	~ 2,4 kg.	0,55
SKP-S/006-M08		M8	4,0	6,0	11,0	8,4	13,0	8,0	8,0	22,5	600	~ 2,2 kg.	0,65
SKP-S/010-M04	10	M4	4,5	6,0	11,5	4,3	9,0	7,0	7,0	21,0	800	~ 2,3 kg.	0,48
SKP-S/010-M05/SD		**M5**	**4,5**	**6,0**	**11,5**	**5,3**	**9,0**	**7,0**	**7,0**	**21,0**	**800**	**~ 2,2 kg.**	**0,42**
SKP-S/010-M06		M6	4,5	6,5	13,0	6,4	11,0	7,0	7,0	23,0	700	~ 2,9 kg.	0,55
SKP-S/010-M08		M8	4,5	6,5	13,0	8,4	13,0	8,0	8,0	24,5	600	~ 2,5 kg.	0,55
SKP-S/010-M10		M10	4,5	6,5	13,0	10,5	15,5	9,0	9,0	27,0	500	~ 2,2 kg.	0,70
SKP-S/016-M05	16	M5	5,5	7,5	12,5	5,3	12,0	7,5	7,5	24,0	400	~ 2,2 kg.	0,60
SKP-S/016-M06/SD		**M6**	**5,5**	**7,5**	**12,5**	**6,5**	**12,0**	**7,5**	**7,5**	**24,0**	**400**	**~ 2,1 kg.**	**0,60**
SKP-S/016-M08		M8	5,5	7,5	13,0	8,4	13,0	8,0	8,0	25,5	500	~ 2,6 kg.	0,65
SKP-S/016-M10		M10	5,5	7,5	13,0	10,5	16,0	9,0	9,0	27,0	400	~ 2,2 kg.	0,75
SKP-S/025-M06	25	M6	7,0	9,5	17,5	6,5	14,0	8,5	8,5	30,5	300	~ 2,8 kg.	1,00
SKP-S/025-M08/SD		**M8**	**7,0**	**9,5**	**17,5**	**8,5**	**14,0**	**8,5**	**8,5**	**30,5**	**300**	**~ 3,0 kg.**	**0,95**
SKP-S/025-M10		M10	7,0	9,5	17,5	10,5	16,0	10,0	10,0	31,5	250	~ 2,4 kg.	1,05
SKP-S/025-M12		M12	7,0	9,5	17,5	13,0	18,0	11,0	11,0	35,0	200	~ 2,2 kg.	1,20
SKP-S/035-M06	35	M6	8,5	11,0	19,0	6,5	16,5	9,5	9,5	34,5	200	~ 2,9 kg.	1,35
SKP-S/035-M08/SD		**M8**	**8,5**	**11,0**	**19,0**	**8,5**	**16,5**	**9,5**	**9,5**	**34,5**	**200**	**~ 2,7 kg.**	**1,30**
SKP-S/035-M10		M10	8,5	11,0	19,0	10,5	16,5	10,0	10,0	34,5	200	~ 2,6 kg.	1,30
SKP-S/035-M12		M12	8,5	11,0	19,0	13,0	18,0	11,0	11,0	36,5	150	~ 2,1 kg.	1,50
SKP-S/050-M06	50	M6	10,0	13,0	20,0	6,5	19,0	11,0	11,0	39,5	125	~ 2,9 kg.	2,10
SKP-S/050-M08		M8	10,0	13,0	20,0	8,5	19,0	11,0	11,0	39,5	125	~ 2,9 kg.	2,10
SKP-S/050-M10/SD		**M10**	**10,0**	**13,0**	**20,0**	**10,5**	**19,0**	**11,0**	**11,0**	**39,5**	**125**	**~ 2,7 kg.**	**2,10**
SKP-S/050-M12		M12	10,0	13,0	20,0	13,0	19,0	11,0	11,0	39,5	125	~ 2,6 kg.	2,15
SKP-S/050-M14		M14	10,0	13,0	20,0	14,5	21,0	13,0	13,0	42,0	100	~ 2,3 kg.	2,35
SKP-S/070-M06	70	M6	11,5	14,5	21,5	6,5	21,0	11,0	11,0	41,5	80	~ 2,3 kg.	2,85
SKP-S/070-M08		M8	11,5	14,5	21,5	8,5	21,0	11,0	11,0	41,5	80	~ 2,1 kg.	2,85
SKP-S/070-M10/SD		**M10**	**11,5**	**14,5**	**21,5**	**10,5**	**21,0**	**11,0**	**11,0**	**41,5**	**80**	**~ 2,1 kg.**	**2,85**
SKP-S/070-M12		M12	11,5	14,5	21,5	13,0	21,0	11,0	11,0	41,5	80	~ 2,1 kg.	3,00
SKP-S/070-M14		M14	11,5	14,5	21,5	14,5	23,0	16,0	16,0	46,5	70	~ 2,0 kg.	3,60
SKP-S/070-M16		M16	11,5	14,5	21,5	16,5	23,0	16,0	16,0	46,5	70	~ 2,0 kg.	3,70

ÜRÜN KODU Order Code	KABLO KESİTİ (mm²) Cable Section (mm²)	CIVATA DELİĞİ Bolt	BOYUTLAR Dimensions								KUTU ADEDİ Box Pcs.	KUTU AĞIRLIĞI Box Weight	BİRİM FİYATI TL Unit Price TL
			d1	d4	a	d2	b	c1	c2	L			
SKP-S/095-M08	95	M8	13,5	16,5	25,0	8,5	24,0	12,5	12,5	48,0	60	~ 2,2 kg.	3,20
SKP-S/095-M10		M10	13,5	16,5	25,0	10,5	24,0	12,5	12,5	48,0	60	~ 2,2 kg.	3,00
SKP-S/095-M12/SD		**M12**	**13,5**	**16,5**	**25,0**	**13,0**	**24,0**	**12,5**	**12,5**	**48,0**	**60**	**~ 2,1 kg.**	**3,00**
SKP-S/095-M14		M14	13,5	16,5	25,0	14,5	26,0	16,0	16,0	50,5	50	~ 1,9 kg.	4,20
SKP-S/095-M16		M16	13,5	16,5	25,0	16,5	26,0	16,0	16,0	50,5	50	~ 1,9 kg.	4,20
SKP-S/120-M08	120	M8	14,5	18,0	27,0	8,5	26,5	14,0	14,0	52,0	50	~ 2,4 kg.	4,40
SKP-S/120-M10		M10	14,5	18,0	27,0	10,5	26,5	14,0	14,0	52,0	50	~ 2,4 kg.	4,40
SKP-S/120-M12/SD		**M12**	**14,5**	**18,0**	**27,0**	**13,0**	**26,5**	**14,0**	**14,0**	**52,0**	**50**	**~ 2,4 kg.**	**4,40**
SKP-S/120-M14		M14	14,5	18,0	27,0	14,5	26,5	14,0	14,0	52,0	50	~ 1,8 kg.	4,50
SKP-S/120-M16		M16	14,5	18,0	27,0	16,5	26,5	14,0	14,0	52,0	50	~ 1,8 kg.	4,50
SKP-S/120-M20		M20	14,5	18,0	27,0	21,0	29,0	16,0	16,0	54,0	40	~ 1,9 kg.	4,70
SKP-S/150-M08	150	M8	16,5	21,0	29,0	8,5	30,5	15,0	15,0	57,0	30	~ 2,5 kg.	7,10
SKP-S/150-M10		M10	16,5	21,0	29,0	10,5	30,5	15,0	15,0	57,0	30	~ 2,5 kg.	7,10
SKP-S/150-M12/SD		**M12**	**16,5**	**21,0**	**29,0**	**13,0**	**30,5**	**15,0**	**15,0**	**57,0**	**30**	**~ 2,5 kg.**	**6,80**
SKP-S/150-M14		M14	16,5	21,0	29,0	14,5	30,5	15,0	15,0	57,0	30	~ 2,3 kg.	7,10
SKP-S/150-M16		M16	16,5	21,0	29,0	16,5	30,5	15,0	15,0	57,0	30	~ 2,3 kg.	7,20
SKP-S/150-M20		M20	16,5	21,0	29,0	21,0	30,5	15,0	15,0	57,0	30	~ 2,2 kg.	7,20
SKP-S/185-M10	185	M10	18,5	23,0	33,0	10,5	33,5	16,0	16,0	63,0	20	~ 2,1 kg.	8,20
SKP-S/185-M12/SD		**M12**	**18,5**	**23,0**	**33,0**	**13,0**	**33,5**	**16,0**	**16,0**	**63,0**	**20**	**~ 2,0 kg.**	**8,00**
SKP-S/185-M14		M14	18,5	23,0	33,0	14,5	33,5	16,0	16,0	63,0	20	~ 1,9 kg.	8,00
SKP-S/185-M16		M16	18,5	23,0	33,0	16,5	33,5	16,0	16,0	63,0	20	~ 1,8 kg.	8,00
SKP-S/185-M20		M20	18,5	23,0	33,0	21,0	33,5	16,0	16,0	63,0	20	~ 1,8 kg.	8,20
SKP-S/240-M10	240	M10	21,0	26,0	37,0	10,5	38,0	16,5	16,5	70,0	20	~ 2,8 kg.	11,20
SKP-S/240-M12/SD		**M12**	**21,0**	**26,0**	**37,0**	**13,0**	**38,0**	**16,5**	**16,5**	**70,0**	**20**	**~ 2,8 kg.**	**11,00**
SKP-S/240-M14		M14	21,0	26,0	37,0	14,5	38,0	16,5	16,5	70,0	20	~ 2,6 kg.	11,00
SKP-S/240-M16		M16	21,0	26,0	37,0	16,5	38,0	16,5	16,5	70,0	20	~ 2,6 kg.	11,00
SKP-S/240-M20		M20	21,0	26,0	37,0	21,0	38,0	16,5	16,5	70,0	20	~ 2,5 kg.	11,20
SKP-S/300-M10	300	M10	23,5	28,5	41,0	10,5	42,0	19,0	22,0	80,0	16	~ 2,8 kg.	13,80
SKP-S/300-M12		M12	23,5	28,5	41,0	13,0	42,0	19,0	22,0	80,0	16	~ 2,8 kg.	13,80
SKP-S/300-M14		M14	23,5	28,5	41,0	14,5	42,0	19,0	22,0	80,0	16	~ 2,7 kg.	13,80
SKP-S/300-M16/SD		**M16**	**23,5**	**28,5**	**41,0**	**17,0**	**42,0**	**19,0**	**22,0**	**80,0**	**16**	**~ 2,6 kg.**	**13,80**
SKP-S/300-M20		M20	23,5	28,5	41,0	21,0	42,0	19,0	22,0	80,0	16	~ 2,5 kg.	13,80
SKP-S/400-M12	400	M12	27,0	33,0	46,0	13,0	48,0	20,0	20,0	90,0	6	~ 1,7 kg.	22,00
SKP-S/400-M14		M14	27,0	33,0	46,0	14,5	48,0	20,0	20,0	90,0	6	~ 1,7 kg.	22,00
SKP-S/400-M16/SD		**M16**	**27,0**	**33,0**	**46,0**	**17,0**	**48,0**	**20,0**	**20,0**	**90,0**	**6**	**~ 1,6 kg.**	**22,00**
SKP-S/400-M20		M20	27,0	33,0	46,0	21,0	48,0	20,0	20,0	90,0	6	~ 1,7 kg.	24,00
SKP-S/500-M16	500	M16	30,0	38,0	56,0	17,0	54,0	22,0	22,0	99,0	5	~ 2,2 kg.	38,00
SKP-S/500-M20/SD		**M20**	**30,0**	**38,0**	**56,0**	**21,0**	**54,0**	**22,0**	**22,0**	**99,0**	**5**	**~ 2,1 kg.**	**38,00**
SKP-S/625-M16	625	M16	34,0	42,0	60,0	17,0	61,0	23,0	23,0	113,0	4	~ 2,3 kg.	65,00
SKP-S/625-M20/SD		**M20**	**34,0**	**42,0**	**60,0**	**21,0**	**61,0**	**23,0**	**23,0**	**113,0**	**4**	**~ 2,3 kg.**	**65,00**

SKP-S Özellikleri

Hammadde	:	**EN 13600 Bakır Boru**
Material	:	Electrolytic Copper Conformed To EN 13600
Kaplama	:	**Kalay**
Coating	:	Tin Plated
Bağlantı	:	**Sıkma**
Joint	:	Clamp Coupling
Boru Et Kalınlığı	:	**Kalın**
Thickness	:	Thick
Kablo Girişi	:	**Normal**
Cable Entry	:	Standard

Bu tabloda koyu yazı karakteri ile belirtilmiş olan kablo pabuçları standart üretimimizdir.

The cable lugs which are indicated in bold font, are standart products of Simpa

SKP-S/GD

SIKMALI KABLO PABUCU GÖZLEM DELİKLİ
TUBULAR CABLE LUGS WITH INSPECTION HOLE

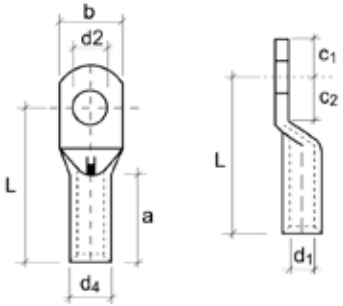

*5846 sayılı yasa gereği fotoğrafların izinsiz yayınlanması ve kullanılması kesinlikle yasaktır.

ÜRÜN KODU Order Code	KABLO KESİTİ (mm²) Cable Section (mm²)	CIVATA DELİĞİ Bolt	BOYUTLAR Dimensions								KUTU ADEDİ Box Pcs.	KUTU AĞIRLIĞI Box Weight	BİRİM FİYATI TL Unit Price TL
			d1	d4	a	d2	b	c1	c2	L			
SKP-S/GD/016-M06/SD	16	M06	5,5	7,5	12,5	6,5	12,0	7,5	7,5	24,0	400	~ 2,0 kg.	0,60
SKP-S/GD/025-M08/SD	25	M08	7,0	9,5	17,5	8,5	14,0	8,5	8,5	30,5	300	~ 2,5 kg.	0,95
SKP-S/GD/035-M08/SD	35	M08	8,5	11,0	19,0	8,5	16,5	9,5	9,5	34,5	200	~ 2,6 kg.	1,30
SKP-S/GD/050-M10/SD	50	M10	10,0	13,0	20,0	10,5	19,0	11,0	11,0	39,5	125	~ 2,6 kg.	2,10
SKP-S/GD/070-M10/SD	70	M10	11,5	14,5	21,5	10,5	21,0	11,0	11,0	41,5	80	~ 2,1 kg.	2,85
SKP-S/GD/095-M12/SD	95	M12	13,5	16,5	25,0	13,0	24,0	12,5	12,5	48,0	60	~ 1,9 kg.	3,00
SKP-S/GD/120-M12/SD	120	M12	14,5	18,0	27,0	13,0	26,5	14,0	14,0	52,0	50	~ 2,4 kg.	4,40
SKP-S/GD/150-M12/SD	150	M12	16,5	21,0	29,0	13,0	30,5	15,0	15,0	57,0	30	~ 2,4 kg.	6,80
SKP-S/GD/185-M12/SD	185	M12	18,5	23,0	33,0	13,0	33,5	16,0	16,0	63,0	20	~ 1,9 kg.	8,00
SKP-S/GD/240-M12/SD	240	M12	21,0	26,0	37,0	13,0	38,0	16,5	16,5	70,0	20	~ 2,7 kg.	11,00

SKP-S/DG Özellikleri

Hammadde	:	**EN 13600 Bakır Boru**
Material	:	Electrolytic Copper Conformed To EN 13600
Kaplama	:	**Kalay**
Coating	:	Tin Plated
Bağlantı	:	**Sıkma**
Joint	:	Clamp Coupling
Boru Et Kalınlığı	:	**Kalın**
Thickness	:	Thick
Kablo Girişi	:	**Normal**
Cable Entry	:	Standard

SKP-S1 SIKMALI KABLO PABUCU
TUBULAR CABLE LUGS

*5846 sayılı yasa gereği fotoğrafların izinsiz yayınlanması ve kullanılması kesinlikle yasaktır.

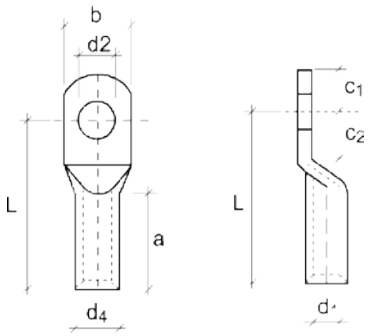

ÜRÜN KODU Order Code	KABLO KESİTİ (mm²) Cable Section (mm²)	CIVATA DELİĞİ Bolt	BOYUTLAR Dimensions								KUTU ADEDİ Box Pcs.	KUTU AĞIRLIĞI Box Weight	BİRİM FİYATI TL Unit Price TL
			d1	d4	a	d2	b	c1	c2	L			
SKP-S1/010-M05		M5	4,5	7,0	10,0	5,5	12,0	6,5	7,5	22,0	500	~ 2,1 kg.	0,60
SKP-S1/010-M06/SD		**M6**	**4,5**	**7,0**	**10,0**	**6,5**	**12,0**	**6,5**	**7,5**	**22,0**	**500**	**~ 2,1 kg.**	**0,60**
SKP-S1/010-M08	**10**	M8	4,5	7,5	10,0	8,5	15,0	10,0	10,0	25,0	400	~ 2,4 kg.	0,70
SKP-S1/010-M10		M10	4,5	7,5	10,0	10,5	17,0	12,0	12,0	27,0	400	~ 2,6 kg.	0,85
SKP-S1/010-M12		M12	4,5	7,5	10,0	13,0	19,0	13,0	13,0	29,0	400	~ 2,7 kg.	1,00
SKP-S1/016-M05		M5	5,5	8,5	13,0	5,5	12,0	5,5	6,5	26,0	400	~ 2,2 kg.	1,00
SKP-S1/016-M06		M6	5,5	8,5	13,0	6,5	12,0	6,2	7,5	27,0	400	~ 3,4 kg.	1,00
SKP-S1/016-M08/SD	**16**	**M8**	**5,5**	**8,5**	**13,0**	**8,4**	**15,0**	**8,5**	**9,5**	**29,0**	**300**	**~ 2,8 kg.**	**1,00**
SKP-S1/016-M10		M10	5,5	8,5	13,0	10,5	17,0	10,5	11,5	31,0	300	~ 3,0 kg.	1,20
SKP-S1/016-M12		M12	5,5	8,5	13,0	13,0	19,0	12,0	13,0	33,0	250	~ 2,6 kg.	1,35
SKP-S1/025-M05		M5	7,0	10,0	15,0	5,5	14,0	7,5	7,5	30,0	200	~ 2,5 kg.	1,45
SKP-S1/025-M06		M6	7,0	10,0	15,0	6,5	14,0	7,5	7,5	30,0	200	~ 2,4 kg.	1,45
SKP-S1/025-M08/SD	**25**	**M8**	**7,0**	**10,0**	**15,0**	**8,4**	**16,0**	**10,0**	**10,0**	**32,0**	**200**	**~ 2,7 kg.**	**1,45**
SKP-S1/025-M10		M10	7,0	10,0	15,0	10,5	18,0	12,0	12,0	34,0	200	~ 2,8 kg.	1,55
SKP-S1/025-M12		M12	7,0	10,0	15,0	13,0	19,0	13,0	13,0	35,0	200	~ 2,8 kg.	1,75
SKP-S1/035-M06		M6	8,5	12,0	17,0	6,5	17,0	7,5	7,5	32,0	125	~ 2,3 kg.	2,10
SKP-S1/035-M08/SD		**M8**	**8,5**	**12,0**	**17,0**	**8,4**	**17,0**	**10,0**	**10,0**	**34,0**	**125**	**~ 2,5 kg.**	**2,10**
SKP-S1/035-M10	**35**	M10	8,5	12,0	17,0	10,5	19,0	12,0	12,0	37,0	125	~ 2,7 kg.	2,35
SKP-S1/035-M12		M12	8,5	12,0	17,0	13,0	21,0	13,0	13,0	38,0	125	~ 2,7 kg.	2,50
SKP-S1/035-M16		M16	8,5	12,0	17,0	17,0	26,0	16,0	16,0	42,0	100	~ 2,9 kg.	2,65
SKP-S1/050-M06		M6	10,0	14,0	19,0	6,5	20,0	10,0	10,0	37,0	80	~ 2,4 kg.	3,30
SKP-S1/050-M08		M8	10,0	14,0	19,0	8,5	20,0	10,0	10,0	37,0	80	~ 2,3 kg.	3,30
SKP-S1/050-M10/SD		**M10**	**10,0**	**14,0**	**19,0**	**10,5**	**20,0**	**12,0**	**12,0**	**39,0**	**80**	**~ 2,5 kg.**	**3,20**
SKP-S1/050-M12	**50**	M12	10,0	14,0	19,0	13,0	23,0	13,0	13,0	43,0	80	~ 2,7 kg.	3,70
SKP-S1/050-M14		M14	10,0	14,0	19,0	15,0	23,0	14,5	14,5	45,0	80	~ 2,7 kg.	4,10
SKP-S1/050-M16		M16	10,0	14,0	19,0	17,0	28,0	16,0	16,0	46,0	80	~ 2,8 kg.	4,30
SKP-S1/050-M20		M20	10,0	14,0	19,0	21,0	30,0	19,0	19,0	48,0	80	~ 2,7 kg.	4,50
SKP-S1/070-M06		M6	12,0	16,5	21,0	6,5	23,0	10,0	10,0	43,0	60	~ 2,8 kg.	4,75
SKP-S1/070-M08		M8	12,0	16,5	21,0	8,5	23,0	10,0	10,0	43,0	60	~ 2,7 kg.	4,65
SKP-S1/070-M10/SD		**M10**	**12,0**	**16,5**	**21,0**	**10,5**	**23,0**	**12,0**	**12,0**	**44,0**	**60**	**~ 2,8 kg.**	**4,65**
SKP-S1/070-M12	**70**	M12	12,0	16,5	21,0	13,0	23,0	13,0	13,0	46,0	60	~ 2,9 kg.	4,90
SKP-S1/070-M14		M14	12,0	16,5	21,0	15,0	23,0	14,5	14,5	48,0	60	~ 2,9 kg.	5,20
SKP-S1/070-M16		M16	12,0	16,5	21,0	17,0	28,0	16,0	16,0	50,0	50	~ 2,6 kg.	5,50
SKP-S1/070-M20		M20	12,0	16,5	21,0	21,0	30,0	19,0	19,0	53,0	50	~ 2,6 kg.	5,75

ÜRÜN KODU Order Code	KABLO KESİTİ (mm²) Cable Section (mm²)	CIVATA DELİĞİ Bolt	BOYUTLAR Dimensions								KUTU ADEDİ Box Pcs.	KUTU AĞIRLIĞI Box Weight	BİRİM FİYATI TL Unit Price TL
			d1	d4	a	d2	b	c1	c2	L			
SKP-S1/095-M08	95	M8	13,5	18,0	25,0	8,5	26,0	12,0	12,0	48,0	50	~ 2,9 kg.	4,90
SKP-S1/095-M10		M10	13,5	18,0	25,0	10,5	26,0	12,0	12,0	48,0	50	~ 2,9 kg.	4,90
SKP-S1/095-M12/SD		**M12**	**13,5**	**18,0**	**25,0**	**13,0**	**26,0**	**13,0**	**13,0**	**49,0**	**50**	**~ 2,8 kg.**	**4,90**
SKP-S1/095-M14		M14	13,5	18,0	25,0	15,0	26,0	14,5	14,5	51,0	50	~ 2,9 kg.	5,20
SKP-S1/095-M16		M16	13,5	18,0	25,0	17,0	28,0	16,0	16,0	54,0	50	~ 3,0 kg.	5,50
SKP-S1/095-M20		M20	13,5	18,0	25,0	21,0	36,0	22,0	22,0	60,0	50	~ 3,5 kg.	5,70
SKP-S1/120-M08	120	M8	15,0	19,5	26,0	8,5	28,0	14,0	14,0	51,0	40	~ 2,7 kg.	5,70
SKP-S1/120-M10		M10	15,0	19,5	26,0	10,5	28,0	14,0	14,0	51,0	40	~ 2,7 kg.	5,70
SKP-S1/120-M12/SD		**M12**	**15,0**	**19,5**	**26,0**	**13,0**	**28,0**	**14,0**	**14,0**	**51,0**	**40**	**~ 2,6 kg.**	**5,50**
SKP-S1/120-M14		M14	15,0	19,5	26,0	15,0	28,0	15,0	15,0	52,0	40	~ 2,6 kg.	5,70
SKP-S1/120-M16		M16	15,0	19,5	26,0	17,0	30,0	16,0	16,0	54,0	40	~ 2,7 kg.	6,00
SKP-S1/120-M20		M20	15,0	19,5	26,0	21,0	36,0	22,0	22,0	63,0	40	~ 3,2 kg.	6,30
SKP-S1/150-M08	150	M8	16,5	21,0	30,0	8,5	31,0	14,0	14,0	56,0	30	~ 2,4 kg.	7,10
SKP-S1/150-M10		M10	16,5	21,0	30,0	10,5	31,0	14,0	14,0	56,0	30	~ 2,4 kg.	7,10
SKP-S1/150-M12/SD		**M12**	**16,5**	**21,0**	**30,0**	**13,0**	**31,0**	**15,0**	**15,0**	**57,0**	**30**	**~ 2,4 kg.**	**6,80**
SKP-S1/150-M14		M14	16,5	21,0	30,0	15,0	31,0	15,0	15,0	57,0	30	~ 2,4 kg.	6,80
SKP-S1/150-M16		M16	16,5	21,0	30,0	17,0	31,0	16,0	16,0	58,0	30	~ 2,3 kg.	7,20
SKP-S1/150-M20		M20	16,5	21,0	30,0	21,0	36,0	22,0	22,0	66,0	30	~ 2,7 kg.	7,40
SKP-S1/185-M10	185	M10	19,0	24,0	30,0	10,5	35,0	18,0	18,0	65,0	20	~ 2,5 kg.	9,40
SKP-S1/185-M12		M12	19,0	24,0	30,0	13,0	35,0	18,0	18,0	65,0	20	~ 2,4 kg.	9,40
SKP-S1/185-M14		M14	19,0	24,0	30,0	15,0	35,0	18,0	18,0	65,0	20	~ 2,3 kg.	9,40
SKP-S1/185-M16/SD		**M16**	**19,0**	**24,0**	**30,0**	**17,0**	**35,0**	**18,0**	**18,0**	**65,0**	**20**	**~ 2,3 kg.**	**9,40**
SKP-S1/185-M20		M20	19,0	24,0	30,0	21,0	39,0	22,0	22,0	69,0	20	~ 2,4 kg.	9,60
SKP-S1/240-M10	240	M10	21,0	26,0	35,0	10,5	39,0	21,5	19,0	72,0	20	~ 3,0 kg.	11,20
SKP-S1/240-M12		M12	21,0	26,0	35,0	13,0	39,0	21,5	19,0	72,0	20	~ 3,0 kg.	11,00
SKP-S1/240-M14		M14	21,0	26,0	35,0	15,0	39,0	21,5	19,0	72,0	20	~ 3,0 kg.	11,00
SKP-S1/240-M16/SD		**M16**	**21,0**	**26,0**	**35,0**	**17,0**	**39,0**	**21,5**	**19,0**	**72,0**	**20**	**~ 2,9 kg.**	**11,00**
SKP-S1/240-M20		M20	21,0	26,0	35,0	21,0	39,0	21,5	19,0	72,0	20	~ 2,8 kg.	11,00
SKP-S1/300-M12	300	M12	23,5	29,5	44,0	13,0	43,0	24,0	24,0	87,0	8	~ 1,9 kg.	22,50
SKP-S1/300-M14		M14	23,5	29,5	44,0	15,0	43,0	24,0	24,0	87,0	8	~ 1,9 kg.	22,50
SKP-S1/300-M16		M16	23,5	29,5	44,0	17,0	43,0	24,0	24,0	87,0	8	~ 1,9 kg.	22,50
SKP-S1/300-M20/SD		**M20**	**23,5**	**29,5**	**44,0**	**21,0**	**43,0**	**24,0**	**24,0**	**87,0**	**8**	**~ 1,9 kg.**	**22,50**
SKP-S1/400-M12	400	M12	27,0	34,0	44,0	13,0	49,0	24,0	24,0	90,0	6	~ 2,0 kg.	35,00
SKP-S1/400-M14		M14	27,0	34,0	44,0	15,0	49,0	24,0	24,0	90,0	6	~ 2,0 kg.	35,00
SKP-S1/400-M16		M16	27,0	34,0	44,0	17,0	49,0	24,0	24,0	90,0	6	~ 2,0 kg.	35,00
SKP-S1/400-M20/SD		**M20**	**27,0**	**34,0**	**44,0**	**21,0**	**49,0**	**24,0**	**24,0**	**90,0**	**6**	**~ 1,9 kg.**	**35,00**

SKP-S1 Özellikleri

Hammadde Material	: :	**EN 13600 Bakır Boru** Electrolytic Copper Conformed To EN 13600
Kaplama Coating	: :	**Kalay** Tin Plated
Bağlantı Joint	: :	**Sıkma** Clamp Coupling
Boru Et Kalınlığı Thickness	: :	**Çok Kalın** Very Thick
Kablo Girişi Cable Entry	: :	**Normal** Standard

Bu tabloda koyu yazı karakteri ile belirtilmiş olan kablo pabuçları standart üretimimizdir.

The cable lugs which are indicated in bold font, are standart products of Simpa

SKP-S2 SIKMALI KABLO PABUCU
TUBULAR CABLE LUGS

*5846 sayılı yasa gereği fotoğrafların izinsiz yayınlanması ve kullanılması kesinlikle yasaktır.

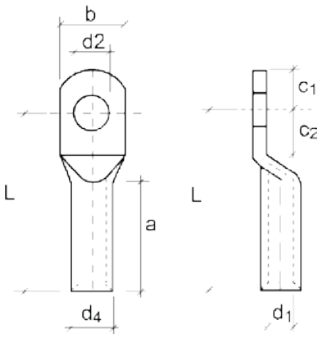

ÜRÜN KODU Order Code	KABLO KESİTİ (mm²) Cable Section (mm²)	CIVATA DELİĞİ Bolt	BOYUTLAR Dimensions								KUTU ADEDİ Box Pcs.	KUTU AĞIRLIĞI Box Weight	BİRİM FİYATI TL Unit Price TL
			d1	d4	a	d2	b	c1	c2	L			
SKP-S2/010-M05	10	M5	4,5	7,0	14,0	5,5	12,0	6,5	7,5	26,0	400	~ 2,6 kg.	0,80
SKP-S2/010-M06/SD		**M6**	**4,5**	**7,0**	**14,0**	**6,5**	**12,0**	**6,5**	**7,5**	**26,0**	**400**	**~ 2,4 kg.**	**0,80**
SKP-S2/010-M08		M8	4,5	7,5	14,0	8,5	15,0	10,0	10,0	29,0	400	~ 2,7 kg.	1,00
SKP-S2/010-M10		M10	4,5	7,5	14,0	10,5	17,0	12,0	12,0	31,0	400	~ 2,9 kg.	1,10
SKP-S2/010-M12		M12	4,5	7,5	14,0	13,0	19,0	13,0	13,0	33,0	300	~ 3,0 kg.	1,20
SKP-S2/016-M05	16	M5	5,5	8,5	17,0	5,5	12,0	5,5	6,5	30,0	250	~ 2,5 kg.	1,40
SKP-S2/016-M06		M6	5,5	8,5	17,0	6,5	12,0	6,2	7,5	31,0	250	~ 2,6 kg.	1,40
SKP-S2/016-M08/SD		**M8**	**5,5**	**8,5**	**17,0**	**8,4**	**15,0**	**8,5**	**9,5**	**33,0**	**250**	**~ 2,7 kg.**	**1,40**
SKP-S2/016-M10		M10	5,5	8,5	17,0	10,5	17,0	10,5	11,5	35,0	250	~ 2,9 kg.	1,50
SKP-S2/016-M12		M12	5,5	8,5	17,0	13,0	19,0	12,0	13,0	37,0	250	~ 3,1 kg.	1,65
SKP-S2/025-M05	25	M5	7,0	10,0	19,0	5,5	14,0	7,5	7,5	34,0	175	~ 2,4 kg.	1,90
SKP-S2/025-M06		M6	7,0	10,0	19,0	6,5	14,0	7,5	7,5	34,0	175	~ 2,4 kg.	1,90
SKP-S2/025-M08/SD		**M8**	**7,0**	**10,0**	**19,0**	**8,4**	**16,0**	**10,0**	**10,0**	**36,0**	**175**	**~ 2,6 kg.**	**1,90**
SKP-S2/025-M10		M10	7,0	10,0	19,0	10,5	18,0	12,0	12,0	38,0	175	~ 2,8 kg.	2,00
SKP-S2/025-M12		M12	7,0	10,0	19,0	13,0	19,0	13,0	13,0	39,0	175	~ 2,7 kg.	2,10
SKP-S2/035-M06	35	M6	8,5	12,0	23,0	6,5	17,0	7,5	7,5	38,0	100	~ 2,2 kg.	2,95
SKP-S2/035-M08/SD		**M8**	**8,5**	**12,0**	**23,0**	**8,4**	**17,0**	**10,0**	**10,0**	**40,0**	**100**	**~ 2,3 kg.**	**2,95**
SKP-S2/035-M10		M10	8,5	12,0	23,0	10,5	19,0	12,0	12,0	43,0	100	~ 2,5 kg.	3,25
SKP-S2/035-M12		M12	8,5	12,0	23,0	13,0	21,0	13,0	13,0	44,0	100	~ 2,5 kg.	3,45
SKP-S2/035-M16		M16	8,5	12,0	23,0	17,0	26,0	16,0	16,0	48,0	100	~ 2,6 kg.	3,60
SKP-S2/050-M06	50	M6	10,0	14,0	25,0	6,5	20,0	10,0	10,0	43,0	60	~ 2,1 kg.	3,85
SKP-S2/050-M08		M8	10,0	14,0	25,0	8,5	20,0	10,0	10,0	43,0	60	~ 2,0 kg.	3,85
SKP-S2/050-M10/SD		**M10**	**10,0**	**14,0**	**25,0**	**10,5**	**20,0**	**12,0**	**12,0**	**45,0**	**60**	**~ 2,1 kg.**	**3,85**
SKP-S2/050-M12		M12	10,0	14,0	25,0	13,0	23,0	13,0	13,0	49,0	60	~ 2,3 kg.	4,35
SKP-S2/050-M16		M16	10,0	14,0	25,0	17,0	28,0	16,0	16,0	52,0	60	~ 2,3 kg.	4,70
SKP-S2/050-M20		M20	10,0	14,0	25,0	21,0	30,0	19,0	19,0	54,0	60	~ 2,3 kg.	4,95
SKP-S2/070-M06	70	M6	12,0	16,5	29,0	6,5	23,0	10,0	10,0	51,0	50	~ 2,7 kg.	5,60
SKP-S2/070-M08		M8	12,0	16,5	29,0	8,5	23,0	10,0	10,0	51,0	50	~ 2,6 kg.	5,60
SKP-S2/070-M10/SD		**M10**	**12,0**	**16,5**	**29,0**	**10,5**	**23,0**	**12,0**	**12,0**	**52,0**	**50**	**~ 2,7 kg.**	**5,60**
SKP-S2/070-M12		M12	12,0	16,5	29,0	13,0	23,0	13,0	13,0	54,0	50	~ 2,7 kg.	6,00
SKP-S2/070-M16		M16	12,0	16,5	29,0	17,0	28,0	16,0	16,0	58,0	50	~ 2,9 kg.	6,20
SKP-S2/070-M20		M20	12,0	16,5	29,0	21,0	30,0	19,0	19,0	61,0	50	~ 3,0 kg.	6,45

ÜRÜN KODU Order Code	KABLO KESİTİ (mm²) Cable Section (mm²)	CIVATA DELİĞİ Bolt	BOYUTLAR Dimensions d1	d4	a	d2	b	c1	c2	L	KUTU ADEDİ Box Pcs.	KUTU AĞIRLIĞI Box Weight	BİRİM FİYATI TL Unit Price TL
SKP-S2/095-M08		M8	13,5	18,0	33,0	8,5	26,0	12,0	12,0	56,0	40	~ 2,6 kg.	6,35
SKP-S2/095-M10		M10	13,5	18,0	33,0	10,5	26,0	12,0	12,0	56,0	40	~ 2,6 kg.	6,35
SKP-S2/095-M12/SD	**95**	**M12**	**13,5**	**18,0**	**33,0**	**13,0**	**26,0**	**13,0**	**13,0**	**57,0**	**40**	**~ 2,6 kg.**	**6,35**
SKP-S2/095-M16		M16	13,5	18,0	33,0	17,0	28,0	16,0	16,0	62,0	40	~ 2,7 kg.	6,85
SKP-S2/095-M20		M20	13,5	18,0	33,0	21,0	36,0	22,0	22,0	68,0	40	~ 3,1 kg.	7,15
SKP-S2/120-M08		M8	15,0	19,5	36,0	8,5	28,0	14,0	14,0	61,0	30	~ 2,4 kg.	7,60
SKP-S2/120-M10		M10	15,0	19,5	36,0	10,5	28,0	14,0	14,0	61,0	30	~ 2,3 kg.	7,60
SKP-S2/120-M12/SD	**120**	**M12**	**15,0**	**19,5**	**36,0**	**13,0**	**28,0**	**14,0**	**14,0**	**61,0**	**30**	**~ 2,3 kg.**	**7,60**
SKP-S2/120-M16		M16	15,0	19,5	36,0	17,0	30,0	16,0	16,0	64,0	30	~ 2,3 kg.	8,20
SKP-S2/120-M20		M20	15,0	19,5	36,0	21,0	36,0	22,0	22,0	73,0	30	~ 2,7 kg.	8,65
SKP-S2/150-M08		M8	16,5	21,0	40,0	8,5	31,0	14,0	14,0	66,0	25	~ 2,3 kg.	9,85
SKP-S2/150-M10		M10	16,5	21,0	40,0	10,5	31,0	14,0	14,0	66,0	25	~ 2,3 kg.	9,85
SKP-S2/150-M12/SD	**150**	**M12**	**16,5**	**21,0**	**40,0**	**13,0**	**31,0**	**15,0**	**15,0**	**67,0**	**25**	**~ 2,3 kg.**	**9,85**
SKP-S2/150-M16		M16	16,5	21,0	40,0	17,0	31,0	16,0	16,0	68,0	25	~ 2,2 kg.	10,50
SKP-S2/150-M20		M20	16,5	21,0	40,0	21,0	36,0	22,0	22,0	76,0	25	~ 2,6 kg.	11,00
SKP-S2/185-M10		M10	19,0	24,0	42,0	10,5	35,0	16,0	16,0	72,5	20	~ 2,6 kg.	11,50
SKP-S2/185-M12/SD	**185**	**M12**	**19,0**	**24,0**	**42,0**	**13,0**	**35,0**	**16,0**	**16,0**	**72,5**	**20**	**~ 2,6 kg.**	**11,50**
SKP-S2/185-M16		M16	19,0	24,0	42,0	17,0	35,0	16,0	16,0	72,5	20	~ 2,7 kg.	11,50
SKP-S2/185-M20		M20	19,0	24,0	42,0	21,0	39,0	21,5	19,0	76,5	20	~ 2,8 kg.	12,00
SKP-S2/240-M10		M10	21,0	26,0	45,0	10,5	39,0	16,5	16,5	79,0	15	~ 2,5 kg.	13,00
SKP-S2/240-M12/SD	**240**	**M12**	**21,0**	**26,0**	**45,0**	**13,0**	**39,0**	**16,5**	**16,5**	**79,0**	**15**	**~ 2,3 kg.**	**13,00**
SKP-S2/240-M16		M16	21,0	26,0	45,0	17,0	39,0	16,5	16,5	79,0	15	~ 2,4 kg.	13,00
SKP-S2/240-M20		M20	21,0	26,0	45,0	21,0	39,0	21,5	19,0	82,0	15	~ 2,4 kg.	13,50
SKP-S2/300-M12		M12	23,5	29,5	56,0	13,0	43,0	24,0	24,0	99,0	8	~ 2,2 kg.	26,00
SKP-S2/300-M16	**300**	M16	23,5	29,5	56,0	17,0	43,0	24,0	24,0	99,0	8	~ 2,1 kg.	26,00
SKP-S2/300-M20/SD		**M20**	**23,5**	**29,5**	**56,0**	**21,0**	**43,0**	**24,0**	**24,0**	**99,0**	**8**	**~ 2,1 kg.**	**26,00**
SKP-S2/400-M12		M12	27,0	34,0	60,0	13,0	49,0	24,0	24,0	106,0	6	~ 2,3 kg.	38,50
SKP-S2/400-M16	**400**	M16	27,0	34,0	60,0	17,0	49,0	24,0	24,0	106,0	6	~ 2,3 kg.	38,50
SKP-S2/400-M20/SD		**M20**	**27,0**	**34,0**	**60,0**	**21,0**	**49,0**	**24,0**	**24,0**	**106,0**	**6**	**~ 2,2 kg.**	**38,50**

SKP-S2 Özellikleri

Hammadde Material	:	**EN 13600 Bakır Boru** Electrolytic Copper Conformed To EN 13600
Kaplama Coating	:	**Kalay** Tin Plated
Bağlantı Joint	:	**Sıkma** Clamp Coupling
Boru Et Kalınlığı Thickness	:	**Çok Kalın** Very Thick
Kablo Girişi Cable Entry	:	**Uzun** Long

Bu tabloda koyu yazı karakteri ile belirtilmiş olan kablo pabuçları standart üretimimizdir.

The cable lugs which are indicated in bolt font, are standart products of Simpa

SKP-S3 SIKMALI KABLO PABUCU
TUBULAR CABLE LUGS

*5846 sayılı yasa gereği fotoğrafların izinsiz yayınlanması ve kullanılması kesinlikle yasaktır.

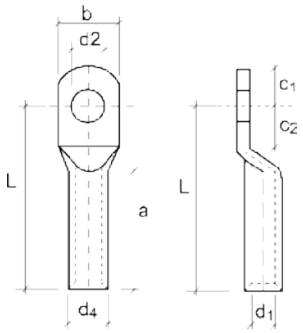

ÜRÜN KODU Order Code	KABLO KESİTİ (mm²) Cable Section (mm²)	CIVATA DELİĞİ Bolt	BOYUTLAR Dimensions								KUTU ADEDİ Box Pcs.	KUTU AĞIRLIĞI Box Weight	BİRİM FİYATI TL Unit Price TL
			d1	d4	a	d2	b	c1	c2	L			
SKP-S3/025-M05	25	M5	7,0	10,0	40,0	5,5	14,0	7,5	7,5	55,0	125	~ 2,7 kg.	2,45
SKP-S3/025-M06		M6	7,0	10,0	40,0	6,5	14,0	7,5	7,5	55,0	125	~ 2,6 kg.	2,45
SKP-S3/025-M08/SD		**M8**	**7,0**	**10,0**	**40,0**	**8,4**	**16,0**	**10,0**	**10,0**	**57,0**	**125**	**~ 2,8 kg.**	**2,45**
SKP-S3/025-M10		M10	7,0	10,0	40,0	10,5	18,0	12,0	12,0	59,0	125	~ 2,9 kg.	2,60
SKP-S3/025-M12		M12	7,0	10,0	40,0	13,0	19,0	13,0	13,0	60,0	125	~ 2,9 kg.	3,20
SKP-S3/025-M14		M14	7,0	10,0	40,0	15,0	21,0	14,5	14,5	63,0	125	~ 3,0 kg.	3,75
SKP-S3/035-M06	35	M6	8,5	12,0	40,0	6,5	17,0	7,5	7,5	55,0	80	~ 2,4 kg.	4,00
SKP-S3/035-M08/SD		**M8**	**8,5**	**12,0**	**40,0**	**8,4**	**17,0**	**10,0**	**10,0**	**57,0**	**80**	**~ 2,4 kg.**	**4,00**
SKP-S3/035-M10		M10	8,5	12,0	40,0	10,5	19,0	12,0	12,0	60,0	80	~ 2,7 kg.	4,20
SKP-S3/035-M12		M12	8,5	12,0	40,0	13,0	21,0	13,0	13,0	61,0	80	~ 2,7 kg.	4,40
SKP-S3/035-M14		M14	8,5	12,0	40,0	15,0	21,0	14,5	14,5	63,0	80	~ 2,7 kg.	4,95
SKP-S3/035-M16		M16	8,5	12,0	40,0	17,0	26,0	16,0	16,0	65,0	80	~ 2,8 kg.	5,65
SKP-S3/050-M06	50	M6	10,0	14,0	50,0	6,5	20,0	10,0	10,0	68,0	50	~ 2,6 kg.	6,50
SKP-S3/050-M08		M8	10,0	14,0	50,0	8,5	20,0	10,0	10,0	68,0	50	~ 2,5 kg.	6,50
SKP-S3/050-M10/SD		**M10**	**10,0**	**14,0**	**50,0**	**10,5**	**20,0**	**12,0**	**12,0**	**70,0**	**50**	**~ 2,6 kg.**	**6,50**
SKP-S3/050-M12		M12	10,0	14,0	50,0	13,0	23,0	13,0	13,0	74,0	50	~ 2,7 kg.	6,80
SKP-S3/050-M14		M14	10,0	14,0	50,0	15,0	23,0	14,5	14,5	76,0	50	~ 2,7 kg.	7,20
SKP-S3/050-M16		M16	10,0	14,0	50,0	17,0	28,0	16,0	16,0	77,0	50	~ 2,8 kg.	7,50
SKP-S3/050-M20		M20	10,0	14,0	50,0	21,0	30,0	19,0	19,0	79,0	50	~ 2,8 kg.	8,35
SKP-S3/070-M06	70	M6	12,0	16,5	50,0	6,5	23,0	10,0	10,0	72,0	40	~ 2,9 kg.	7,25
SKP-S3/070-M08		M8	12,0	16,5	50,0	8,5	23,0	10,0	10,0	72,0	40	~ 2,9 kg.	7,25
SKP-S3/070-M10/SD		**M10**	**12,0**	**16,5**	**50,0**	**10,5**	**23,0**	**12,0**	**12,0**	**73,0**	**40**	**~ 2,9 kg.**	**7,25**
SKP-S3/070-M12		M12	12,0	16,5	50,0	13,0	23,0	13,0	13,0	75,0	40	~ 3,0 kg.	7,25
SKP-S3/070-M14		M14	12,0	16,5	50,0	15,0	23,0	14,5	14,5	77,0	40	~ 3,0 kg.	7,50
SKP-S3/070-M16		M16	12,0	16,5	50,0	17,0	28,0	16,0	16,0	79,0	40	~ 3,1 kg.	8,00
SKP-S3/070-M20		M20	12,0	16,5	50,0	21,0	30,0	19,0	19,0	82,0	40	~ 3,1 kg.	8,50
SKP-S3/095-M08	95	M8	13,5	18,0	50,0	8,5	26,0	12,0	12,0	73,0	30	~ 2,5 kg.	8,65
SKP-S3/095-M10		M10	13,5	18,0	50,0	10,5	26,0	12,0	12,0	73,0	30	~ 2,5 kg.	8,65
SKP-S3/095-M12/SD		**M12**	**13,5**	**18,0**	**50,0**	**13,0**	**26,0**	**13,0**	**13,0**	**74,0**	**30**	**~ 2,5 kg.**	**8,65**
SKP-S3/095-M14		M14	13,5	18,0	50,0	15,0	26,0	14,5	14,5	76,0	30	~ 2,6 kg.	9,20
SKP-S3/095-M16		M16	13,5	18,0	50,0	17,0	28,0	16,0	16,0	79,0	30	~ 2,7 kg.	9,75
SKP-S3/095-M20		M20	13,5	18,0	50,0	21,0	36,0	22,0	22,0	85,0	30	~ 2,8 kg.	10,50

ÜRÜN KODU Order Code	KABLO KESİTİ (mm²) Cable Section (mm²)	CIVATA DELİĞİ Bolt	BOYUTLAR Dimensions d1	d4	a	d2	b	c1	c2	L	KUTU ADEDİ Box Pcs.	KUTU AĞIRLIĞI Box Weight	BİRİM FİYATI TL Unit Price TL
SKP-S3/120-M08	120	M8	15,0	19,5	60,0	8,5	28,0	14,0	14,0	85,0	25	~ 2,6 kg.	9,80
SKP-S3/120-M10		M10	15,0	19,5	60,0	10,5	28,0	14,0	14,0	85,0	25	~ 2,6 kg.	9,80
SKP-S3/120-M12/SD		**M12**	**15,0**	**19,5**	**60,0**	**13,0**	**28,0**	**14,0**	**14,0**	**85,0**	**25**	**~ 2,6 kg.**	**9,80**
SKP-S3/120-M14		M14	15,0	19,5	60,0	15,0	28,0	15,0	15,0	86,0	25	~ 2,6 kg.	10,30
SKP-S3/120-M16		M16	15,0	19,5	60,0	17,0	30,0	16,0	16,0	88,0	25	~ 2,7 kg.	10,70
SKP-S3/120-M20		M20	15,0	19,5	60,0	21,0	36,0	22,0	22,0	97,0	25	~ 2,9 kg.	11,50
SKP-S3/150-M08	150	M8	16,5	21,0	60,0	8,5	31,0	14,0	14,0	86,0	20	~ 2,3 kg.	11,00
SKP-S3/150-M10		M10	16,5	21,0	60,0	10,5	31,0	14,0	14,0	86,0	20	~ 2,3 kg.	11,00
SKP-S3/150-M12/SD		**M12**	**16,5**	**21,0**	**60,0**	**13,0**	**31,0**	**15,0**	**15,0**	**87,0**	**20**	**~ 2,3 kg.**	**11,00**
SKP-S3/150-M14		M14	16,5	21,0	60,0	15,0	31,0	15,0	15,0	87,0	20	~ 2,3 kg.	11,40
SKP-S3/150-M16		M16	16,5	21,0	60,0	17,0	31,0	16,0	16,0	88,0	20	~ 2,3 kg.	11,70
SKP-S3/150-M20		M20	16,5	21,0	60,0	21,0	36,0	22,0	22,0	96,0	20	~ 2,5 kg.	12,50
SKP-S3/185-M10	185	M10	19,0	24,0	60,0	10,5	35,0	16,0	16,0	92,0	12	~ 2,0 kg.	14,85
SKP-S3/185-M12/SD		**M12**	**19,0**	**24,0**	**60,0**	**13,0**	**35,0**	**16,0**	**16,0**	**92,0**	**12**	**~ 2,0 kg.**	**14,85**
SKP-S3/185-M14		M14	19,0	24,0	60,0	15,0	35,0	16,0	16,0	92,0	12	~ 2,0 kg.	14,85
SKP-S3/185-M16		M16	19,0	24,0	60,0	17,0	35,0	16,0	16,0	92,0	12	~ 1,9 kg.	14,85
SKP-S3/185-M20		M20	19,0	24,0	60,0	21,0	39,0	21,5	19,0	96,0	12	~ 2,0 kg.	15,50
SKP-S3/240-M10	240	M10	21,0	26,0	60,0	10,5	39,0	16,5	16,5	94,0	12	~ 2,3 kg.	16,00
SKP-S3/240-M12/SD		**M12**	**21,0**	**26,0**	**60,0**	**13,0**	**39,0**	**16,5**	**16,5**	**94,0**	**12**	**~ 2,2 kg.**	**16,00**
SKP-S3/240-M14		M14	21,0	26,0	60,0	15,0	39,0	16,5	16,5	94,0	12	~ 2,1 kg.	16,00
SKP-S3/240-M16		M16	21,0	26,0	60,0	17,0	39,0	16,5	16,5	94,0	12	~ 2,1 kg.	16,00
SKP-S3/240-M20		M20	21,0	26,0	60,0	21,0	39,0	21,5	19,0	97,0	12	~ 2,2 kg.	16,50

SKP-S3 Özellikleri

Hammadde Material	:	**EN 13600 Bakır Boru** Electrolytic Copper Conformed To EN 13600
Kaplama Coating	:	**Kalay** Tin Plated
Bağlantı Joint	:	**Sıkma** Clamp Coupling
Boru Et Kalınlığı Thickness	:	**Çok Kalın** Very Thick
Kablo Girişi Cable Entry	:	**Çok Uzun** Very Long

Bu tabloda koyu yazı karakteri ile belirtilmiş olan kablo pabuçları standart üretimimizdir.

The cable lugs which are indicated in bolt font, are standart products of Simpa

SKP-D

SIKMALI KABLO PABUCU DIN 46235
TUBULAR CABLE LUGS DIN 46235

*5846 sayılı yasa gereği fotoğrafların izinsiz yayınlanması ve kullanılması kesinlikle yasaktır.

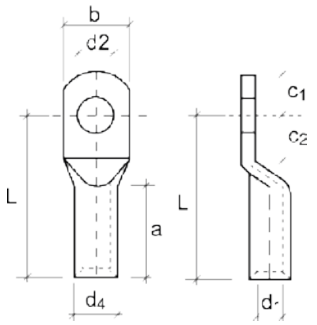

ÜRÜN KODU Order Code	KABLO KESİTİ (mm²) Cable Section (mm²)	CIVATA DELİĞİ Bolt	BOYUTLAR Dimensions								KUTU ADEDİ Box Pcs.	KUTU AĞIRLIĞI Box Weight	BİRİM FİYATI TL Unit Price TL
			d1	d4	a	d2	b	c1	c2	L			
SKP-D/006-M05		M5	3,8	5,5	10,0	5,3	8,5	6,5	7,5	24,0	600	~ 1,9 kg.	0,60
SKP-D/006-M06/SD	**6**	**M6**	**3,8**	**5,5**	**10,0**	**6,4**	**8,5**	**7,5**	**8,0**	**24,0**	**600**	**~ 1,8 kg.**	**0,60**
SKP-D/006-M08		M8	3,8	5,5	10,0	8,4	13,0	10,0	10,0	24,0	600	~ 1,9 kg.	0,60
SKP-D/010-M05		M5	4,5	6,0	10,0	5,3	9,0	7,0	8,5	27,0	500	~ 1,8 kg.	0,60
SKP-D/010-M06/SD	**10**	**M6**	**4,5**	**6,0**	**10,0**	**6,4**	**9,0**	**7,5**	**8,5**	**27,0**	**500**	**~ 1,7 kg.**	**0,60**
SKP-D/010-M08		M8	4,5	6,0	10,0	8,4	13,0	10,0	10,0	27,0	500	~ 1,8 kg.	0,65
SKP-D/016-M06		M6	5,5	8,5	20,0	6,4	13,0	7,5	8,0	36,0	200	~ 2,4 kg.	1,20
SKP-D/016-M08/SD	**16**	**M8**	**5,5**	**8,5**	**20,0**	**8,4**	**13,0**	**10,0**	**10,0**	**36,0**	**200**	**~ 2,4 kg.**	**1,25**
SKP-D/016-M10		M10	5,5	8,5	20,0	10,5	17,0	12,0	12,0	36,0	200	~ 2,4 kg.	1,30
SKP-D/016-M12		M12	5,5	8,5	20,0	13,0	18,0	13,0	13,0	36,0	200	~ 2,4 kg.	1,40
SKP-D/025-M06		M6	7,0	10,0	20,0	6,4	14,0	7,5	8,0	38,0	175	~ 2,6 kg.	1,80
SKP-D/025-M08/SD	**25**	**M8**	**7,0**	**10,0**	**20,0**	**8,4**	**16,0**	**10,0**	**10,0**	**38,0**	**175**	**~ 2,7 kg.**	**1,80**
SKP-D/025-M10		M10	7,0	10,0	20,0	10,5	17,0	12,0	12,0	38,0	175	~ 2,7 kg.	1,80
SKP-D/025-M12		M12	7,0	10,0	20,0	13,0	19,0	13,0	13,0	38,0	150	~ 2,3 kg.	1,90
SKP-D/035-M06		M6	8,2	12,5	20,0	6,4	17,0	7,5	8,0	42,0	100	~ 2,8 kg.	3,10
SKP-D/035-M08		M8	8,2	12,5	20,0	8,4	17,0	10,0	10,0	42,0	100	~ 2,8 kg.	3,10
SKP-D/035-M10/SD	**35**	**M10**	**8,2**	**12,5**	**20,0**	**10,5**	**19,0**	**12,0**	**12,0**	**42,0**	**100**	**~ 3,0 kg.**	**3,10**
SKP-D/035-M12		M12	8,2	12,5	20,0	13,0	21,0	13,0	13,0	42,0	100	~ 2,8 kg.	3,10
SKP-D/035-M14		M14	8,2	12,5	20,0	15,0	21,0	14,5	14,5	42,0	100	~ 2,6 kg.	3,20
SKP-D/050-M08		M8	10,0	14,5	28,0	8,4	20,0	10,0	10,0	52,0	60	~ 2,7 kg.	4,80
SKP-D/050-M10/SD		**M10**	**10,0**	**14,5**	**28,0**	**10,5**	**22,0**	**12,0**	**12,0**	**52,0**	**60**	**~ 2,7 kg.**	**4,80**
SKP-D/050-M12	**50**	M12	10,0	14,5	28,0	13,0	24,0	13,0	13,0	52,0	60	~ 2,7 kg.	4,90
SKP-D/050-M14		M14	10,0	14,5	28,0	15,0	24,0	14,5	14,5	52,0	60	~ 2,7 kg.	5,10
SKP-D/050-M16		M16	10,0	14,5	28,0	17,0	28,0	16,0	16,0	52,0	60	~ 2,7 kg.	5,25
SKP-D/070-M08		M8	11,5	16,5	28,0	8,4	24,0	10,0	10,0	55,0	50	~ 3,0 kg.	6,20
SKP-D/070-M10/SD		**M10**	**11,5**	**16,5**	**28,0**	**10,5**	**24,0**	**12,0**	**12,0**	**55,0**	**50**	**~ 3,1 kg.**	**6,20**
SKP-D/070-M12	**70**	M12	11,5	16,5	28,0	13,0	24,0	13,0	13,0	55,0	50	~ 3,0 kg.	6,30
SKP-D/070-M14		M14	11,5	16,5	28,0	15,0	24,0	14,5	14,5	55,0	50	~ 3,0 kg.	6,40
SKP-D/070-M16		M16	11,5	16,5	28,0	17,0	30,0	16,0	16,0	55,0	50	~ 3,0 kg.	6,50
SKP-D/095-M08		M8	13,5	19,0	35,0	8,4	28,0	12,0	12,0	65,0	35	~ 3,2 kg.	7,45
SKP-D/095-M10		M10	13,5	19,0	35,0	10,5	28,0	12,0	12,0	65,0	35	~ 3,2 kg.	7,30
SKP-D/095-M12/SD	**95**	**M12**	**13,5**	**19,0**	**35,0**	**13,0**	**28,0**	**13,0**	**13,0**	**65,0**	**35**	**~ 3,1 kg.**	**7,30**
SKP-D/095-M14		M14	13,5	19,0	35,0	15,0	28,0	14,5	14,5	65,0	35	~ 3,2 kg.	7,30
SKP-D/095-M16		M16	13,5	19,0	35,0	17,0	32,0	16,0	16,0	65,0	35	~ 3,2 kg.	7,30

ÜRÜN KODU Order Code	KABLO KESİTİ (mm²) Cable Section (mm²)	CIVATA DELİĞİ Bolt	BOYUTLAR Dimensions d1	d4	a	d2	b	c1	c2	L	KUTU ADEDİ Box Pcs.	KUTU AĞIRLIĞI Box Weight	BİRİM FİYATI TL Unit Price TL
SKP-D/120-M10		M10	15,5	21,0	35,0	10,5	32,0	15,0	16,0	70,0	30	~ 3,4 kg.	9,00
SKP-D/120-M12/SD		**M12**	**15,5**	**21,0**	**35,0**	**13,0**	**32,0**	**16,0**	**17,0**	**70,0**	**30**	**~ 3,4 kg.**	**9,00**
SKP-D/120-M14	**120**	M14	15,5	21,0	35,0	15,0	32,0	18,0	19,0	70,0	30	~ 3,4 kg.	9,10
SKP-D/120-M16		M16	15,5	21,0	35,0	17,0	32,0	19,0	20,0	70,0	30	~ 3,4 kg.	9,20
SKP-D/120-M20		M20	15,5	21,0	35,0	21,0	38,0	21,0	22,0	70,0	30	~ 3,4 kg.	9,40
SKP-D/150-M10		M10	17,0	23,5	35,0	10,5	34,0	15,0	16,0	78,0	15	~ 2,5 kg.	13,00
SKP-D/150-M12/SD		**M12**	**17,0**	**23,5**	**35,0**	**13,0**	**34,0**	**16,0**	**17,0**	**78,0**	**15**	**~ 2,5 kg.**	**13,00**
SKP-D/150-M14	**150**	M14	17,0	23,5	35,0	15,0	34,0	19,0	20,0	78,0	15	~ 2,5 kg.	13,40
SKP-D/150-M16		M16	17,0	23,5	35,0	17,0	34,0	19,0	20,0	78,0	15	~ 2,5 kg.	13,40
SKP-D/150-M20		M20	17,0	23,5	35,0	21,0	40,0	21,0	22,0	78,0	15	~ 2,4 kg.	14,00
SKP-D/185-M10		M10	19,0	25,5	40,0	10,5	37,0	15,0	16,0	82,0	12	~ 2,3 kg.	15,00
SKP-D/185-M12/SD		**M12**	**19,0**	**25,5**	**40,0**	**13,0**	**37,0**	**16,0**	**17,0**	**82,0**	**12**	**~ 2,3 kg.**	**15,00**
SKP-D/185-M14	**185**	M14	19,0	25,5	40,0	15,0	37,0	19,0	20,0	82,0	12	~ 2,3 kg.	16,00
SKP-D/185-M16		M16	19,0	25,5	40,0	17,0	37,0	19,0	20,0	82,0	12	~ 2,3 kg.	16,00
SKP-D/185-M20		M20	19,0	25,5	40,0	21,0	40,0	21,0	22,0	82,0	12	~ 2,2 kg.	16,50
SKP-D/240-M12/SD		**M12**	**21,5**	**29,0**	**40,0**	**13,0**	**42,0**	**16,0**	**17,0**	**92,0**	**8**	**~ 2,2 kg.**	**22,00**
SKP-D/240-M14	**240**	M14	21,5	29,0	40,0	15,0	42,0	19,0	20,0	92,0	8	~ 2,3 kg.	22,00
SKP-D/240-M16		M16	21,5	29,0	40,0	17,0	42,0	19,0	20,0	92,0	8	~ 2,2 kg.	22,50
SKP-D/240-M20		M20	21,5	29,0	40,0	21,0	45,0	21,0	22,0	92,0	8	~ 2,2 kg.	24,00
SKP-D/300-M14		M14	24,5	32,0	50,0	15,0	48,0	19,0	22,0	100,0	8	~ 2,7 kg.	28,00
SKP-D/300-M16/SD	**300**	**M16**	**24,5**	**32,0**	**50,0**	**17,0**	**48,0**	**19,0**	**22,0**	**100,0**	**8**	**~ 2,7 kg.**	**28,00**
SKP-D/300-M20		M20	24,5	32,0	50,0	21,0	48,0	22,0	22,0	100,0	8	~ 2,7 kg.	28,00
SKP-D/400-M14		M14	27,5	38,5	70,0	15,0	55,0	25,0	25,0	115,0	5	~ 2,7 kg.	52,00
SKP-D/400-M16/SD	**400**	**M16**	**27,5**	**38,5**	**70,0**	**17,0**	**55,0**	**25,0**	**25,0**	**115,0**	**5**	**~ 2,8 kg.**	**52,00**
SKP-D/400-M20		M20	27,5	38,5	70,0	21,0	55,0	25,0	25,0	115,0	5	~ 2,6 kg.	52,00
SKP-D/500-M16	**500**	M16	31,0	42,0	70,0	17,0	60,0	25,0	25,0	125,0	4	~ 3,2 kg.	62,00
SKP-D/500-M20/SD		**M20**	**31,0**	**42,0**	**70,0**	**21,0**	**60,0**	**25,0**	**25,0**	**125,0**	**4**	**~ 3,3 kg.**	**62,00**
SKP-D/625-M16	**625**	M16	34,5	44,0	80,0	17,0	60,0	25,0	25,0	135,0	3	~ 3,2 kg.	72,00
SKP-D/625-M20/SD		**M20**	**34,5**	**44,0**	**80,0**	**21,0**	**60,0**	**25,0**	**25,0**	**135,0**	**3**	**~ 2,5 kg.**	**72,00**
SKP-D/800-M16	**800**	M16	40,0	52,0	100,0	17,0	75,0	30,0	30,0	165,0	4	~ 6,2 kg.	160,00
SKP-D/800-M20/SD		**M20**	**40,0**	**52,0**	**100,0**	**21,0**	**75,0**	**30,0**	**30,0**	**165,0**	**4**	**~ 6,0 kg.**	**160,00**
SKP-D/1000-M16	**1000**	M16	44,0	58,0	100,0	17,0	85,0	30,0	30,0	165,0	4	~ 8,0 kg.	195,00
SKP-D/1000-M20/SD		**M20**	**44,0**	**58,0**	**100,0**	**21,0**	**85,0**	**30,0**	**30,0**	**165,0**	**4**	**~ 7,4 kg.**	**195,00**

SKP-D Özellikleri

Hammadde	:	**EN 13600 Bakır Boru**
Material	:	Electrolytic Copper Conformed To EN 13600
Kaplama	:	**Kalay**
Coating	:	Tin Plated
Bağlantı	:	**Sıkma**
Joint	:	Clamp Coupling

DIN Normu 46235'e uygundur.
Conformed to DIN 46235

Bu tabloda koyu yazı karakteri ile belirtilmiş olan kablo pabuçları standart üretimimizdir.
The cable lugs which are indicated in bolt font, are standart products of Simpa

SKP-DG

SIKMALI KABLO PABUCU
(DAR GİRİŞLİ ŞALT MALZEMELERİ İÇİN)
TUBULAR CABLE LUGS
(FOR SWITCH GEAR CONNECTIONS)

*5846 sayılı yasa gereği fotoğrafların izinsiz yayınlanması ve kullanılması kesinlikle yasaktır.

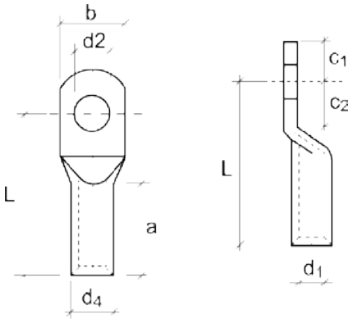

ÜRÜN KODU Order Code	KABLO KESİTİ (mm²) Cable Section (mm²)	CIVATA DELİĞİ Bolt	BOYUTLAR Dimensions								KUTU ADEDİ Box Pcs.	KUTU AĞIRLIĞI Box Weight	BİRİM FİYATI TL Unit Price TL
			d1	d4	a	d2	b	c1	c2	L			
SKP-DG/035-M06	35	M6	8,5	12,0	17,0	6,5	15,0	7,5	7,5	32,0	150	~ 2,7 kg.	3,00
SKP-DG/050-M06	50	M6	10,0	14,0	19,0	6,5	15,0	10,0	10,0	37,0	100	~ 2,9 kg.	4,75
SKP-DG/050-M08		M8	10,0	14,0	19,0	8,5	17,0	10,0	10,0	37,0	100	~ 2,8 kg.	4,75
SKP-DG/050-M10		M10	10,0	14,0	19,0	10,5	19,0	11,5	12,0	39,0	100	~ 3,1 kg.	4,75
SKP-DG/070-M06	70	M6	12,0	16,5	21,0	6,5	17,0	10,0	10,0	43,0	80	~ 3,4 kg.	6,50
SKP-DG/070-M08		M8	12,0	16,5	21,0	8,5	17,0	10,0	10,0	43,0	80	~ 3,3 kg.	6,50
SKP-DG/070-M10		M10	12,0	16,5	21,0	10,5	19,0	11,5	12,0	44,0	80	~ 3,6 kg.	6,50
SKP-DG/070-M12		M12	12,0	16,5	21,0	13,0	19,0	13,0	13,0	46,0	80	~ 3,4 kg.	7,80
SKP-DG/095-M06	95	M6	13,5	18,0	25,0	6,5	19,0	11,5	12,0	48,0	60	~ 3,3 kg.	8,50
SKP-DG/095-M08		M8	13,5	18,0	25,0	8,5	19,0	11,5	12,0	48,0	60	~ 3,3 kg.	8,50
SKP-DG/095-M10		M10	13,5	18,0	25,0	10,5	19,0	11,5	12,0	48,0	60	~ 3,1 kg.	8,50
SKP-DG/095-M12		M12	13,5	18,0	25,0	13,0	19,0	13,0	13,0	49,0	60	~ 3,1 kg.	8,50
SKP-DG/120-M06	120	M6	15,0	19,5	26,0	6,5	19,0	11,5	14,0	51,0	50	~ 3,1 kg.	9,50
SKP-DG/120-M08		M8	15,0	19,5	26,0	8,5	19,0	11,5	14,0	51,0	50	~ 3,0 kg.	9,50
SKP-DG/120-M10		M10	15,0	19,5	26,0	10,5	19,0	11,5	14,0	51,0	50	~ 2,9 kg.	9,50
SKP-DG/120-M12		M12	15,0	19,5	26,0	13,0	19,0	14,0	14,0	51,0	50	~ 3,0 kg.	9,50
SKP-DG/150-M06	150	M6	16,5	21,0	30,0	6,5	19,0	11,5	14,0	56,0	40	~ 2,7 kg.	12,50
SKP-DG/150-M08		M8	16,5	21,0	30,0	8,5	19,0	11,5	14,0	56,0	40	~ 2,7 kg.	12,50
SKP-DG/150-M10		M10	16,5	21,0	30,0	10,5	19,0	11,5	14,0	56,0	40	~ 2,7 kg.	12,50
SKP-DG/150-M12		M12	16,5	21,0	30,0	13,0	19,0	15,0	15,0	57,0	40	~ 2,9 kg.	12,50
SKP-DG/185-M10	185	M10	19,0	24,0	30,0	10,5	24,5	11,5	18,0	65,0	25	~ 2,7 kg.	18,00
SKP-DG/185-M12		M12	19,0	24,0	30,0	13,0	31,0	18,0	18,0	65,0	25	~ 2,8 kg.	18,00
SKP-DG/185-M16		M16	19,0	24,0	30,0	17,0	31,0	18,0	18,0	65,0	25	~ 2,4 kg.	18,00
SKP-DG/240-M10	240	M10	21,0	26,0	35,0	10,5	31,0	11,5	19,0	72,0	20	~ 2,5 kg.	23,00
SKP-DG/240-M12		M12	21,0	26,0	35,0	13,0	31,0	21,5	19,0	72,0	20	~ 2,8 kg.	23,00
SKP-DG/240-M16		M16	21,0	26,0	35,0	17,0	31,0	21,5	19,0	72,0	20	~ 2,7 kg.	23,00
SKP-DG/300-M10	300	M10	23,5	29,5	44,0	10,5	31,0	11,5	24,0	87,0	10	~ 2,0 kg.	29,00
SKP-DG/300-M12		M12	23,5	29,5	44,0	13,0	31,0	24,0	24,0	87,0	10	~ 2,3 kg.	29,00
SKP-DG/300-M16		M16	23,5	29,5	44,0	17,0	31,0	24,0	24,0	87,0	10	~ 2,3 kg.	29,00

SKP-DG Özellikleri

Hammadde Material	: :	EN 13600 Bakır Boru Electrolytic Copper Conformed To EN 13600
Kaplama Coating	: :	Kalay Tin Plated
Bağlantı Joint	: :	Sıkma / Dar Girişli Clamp Coupling / For Reduced Connecting Space
Boru Et Kalınlığı Thickness	: :	Çok Kalın Very Thick
Kablo Girişi Cable Entry	: :	Çok Uzun Very Long

Talep edilmesi durumunda 45 ve 90 derece üretimimiz bulunmaktadır.

Upon request, it is available in 45 & 90 degrees.

YENİ

Simpa®

Nisan 2016

SKP-L90-S

90° AÇILI KABLO PABUCU STANDART TİP (S)

STANDARD TYPE 90° ANGULAR CABLE LUGS

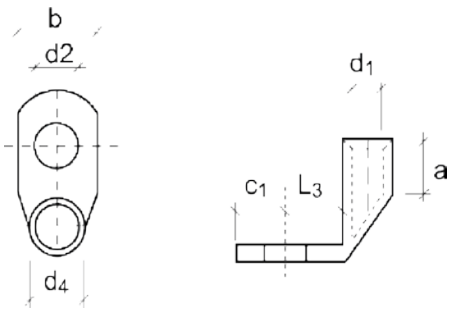

ÜRÜN KODU Order Code	KABLO KESİTİ (mm²) Cable Section (mm²)	CIVATA DELİĞİ Bolt	BOYUTLAR Dimensions							KUTU ADEDİ Box Pcs.	KUTU AĞIRLIĞI Box Weight	BİRİM FİYATI TL Unit Price TL
			d1	d4	a	d2	b	c1	L3			
SKP-L90-S/010-M05	10	M5	4,5	6,5	11,5	5,5	12,0	5,5	7,0	400		0,55
SKP-L90-S/016-M06	16	M6	5,5	7,5	13,0	6,5	12,0	5,5	6,5	300		0,80
SKP-L90-S/025-M08	25	M8	7,0	9,5	17,5	8,5	13,5	6,8	9,2	200		1,30
SKP-L90-S/035-M08	35	M8	8,5	11,0	20,0	8,5	16,0	8,3	9,7	100		1,75
SKP-L90-S/050-M10	50	M10	10,0	13,0	22,5	10,5	18,0	10,0	12,0	70		2,85
SKP-L90-S/070-M10	70	M10	11,5	14,5	24,0	10,5	21,5	10,0	12,0	50		4,00
SKP-L90-S/095-M12	95	M12	13,5	16,5	27,0	13,0	25,0	10,0	12,0	40		4,20
SKP-L90-S/120-M12	120	M12	14,5	18,0	30,0	13,0	29,0	13,0	14,5	30		6,00
SKP-L90-S/150-M12	150	M12	16,5	21,0	30,0	13,0	31,0	14,0	17,0	25		9,00
SKP-L90-S/185-M12	185	M12	18,5	23,0	34,5	13,0	37,0	17,0	18,0	20		11,00
SKP-L90-S/240-M12	240	M12	21,0	26,0	35,0	13,0	41,0	17,0	18,0	15		15,00

SKP-L 45-S

45° AÇILI KABLO PABUCU STANDART TİP (S)

STANDARD TYPE 45° ANGULAR CABLE LUGS

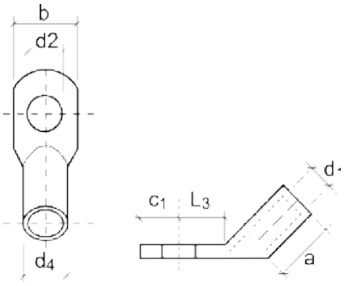

*5846 sayılı yasa gereği fotoğrafların izinsiz yayınlanması ve kullanılması kesinlikle yasaktır.

ÜRÜN KODU Order Code	KABLO KESİTİ (mm²) Cable Section (mm²)	CIVATA DELİĞİ Bolt	BOYUTLAR Dimensions							KUTU ADEDİ Box Pcs.	KUTU AĞIRLIĞI Box Weight	BİRİM FİYATI TL Unit Price TL
			d1	d4	a	d2	b	c1	L3			
SKP-L45-S/010-M05	10	M5	4,5	6,5	11,5	5,5	12,0	5,5	7,0	500		0,55
SKP-L45-S/016-M06	16	M6	5,5	7,5	13,0	6,5	12,0	5,5	6,5	300		0,80
SKP-L45-S/025-M08	25	M8	7,0	9,5	17,5	8,5	13,5	6,8	9,2	200		1,30
SKP-L45-S/035-M08	35	M8	8,5	11,0	20,0	8,5	16,0	8,3	9,7	125		1,75
SKP-L45-S/050-M10	50	M10	10,0	13,0	22,5	10,5	18,0	10,0	12,0	80		2,85
SKP-L45-S/070-M10	70	M10	11,5	14,5	24,0	10,5	21,5	10,0	12,0	60		4,00
SKP-L45-S/095-M12	95	M12	13,5	16,5	27,0	13,0	25,0	10,0	12,0	40		4,20
SKP-L45-S/120-M12	120	M12	14,5	18,0	30,0	13,0	29,0	13,0	14,5	30		6,00
SKP-L45-S/150-M12	150	M12	16,5	21,0	30,0	13,0	31,0	14,0	17,0	25		9,00
SKP-L45-S/185-M12	185	M12	18,5	23,0	34,5	13,0	37,0	17,0	18,0	20		11,00
SKP-L45-S/240-M12	240	M12	21,0	26,0	35,0	13,0	41,0	17,0	18,0	15		15,00

SKP-L90

90° AÇILI KABLO PABUCU
KALIN TİP (S1)
EUROPE TYPE 90° ANGULAR CABLE LUGS

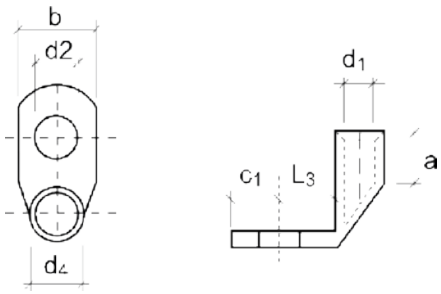

*5846 sayılı yasa gereği fotoğrafların izinsiz yayınlanması ve kullanılması kesinlikle yasaktır.

ÜRÜN KODU Order Code	KABLO KESİTİ (mm²) Cable Section (mm²)	CIVATA DELİĞİ Bolt	BOYUTLAR Dimensions							KUTU ADEDİ Box Pcs.	KUTU AĞIRLIĞI Box Weight	BİRİM FİYATI TL Unit Price TL
			d1	d4	a	d2	b	c1	L3			
SKP-L90/006-M05	6	M5	3,5	6,5	13,0	5,5	10,0	7,5	9,0	500	~ 3,2 kg.	0,70
SKP-L90/006-M06		M6	3,5	6,5	13,0	6,5	12,0	7,5	10,0	500	~ 3,3 kg.	0,70
SKP-L90/006-M08		M8	3,5	6,5	13,0	8,5	14,0	10,0	13,0	500	~ 3,3 kg.	0,75
SKP-L90/010-M05	10	M5	4,5	7,5	14,0	5,5	12,0	6,5	10,0	400	~ 2,4 kg.	0,80
SKP-L90/010-M06		M6	4,5	7,5	14,0	6,5	12,0	6,5	10,0	400	~ 2,3 kg.	0,80
SKP-L90/010-M08		M8	4,5	7,5	14,0	8,5	15,0	10,0	13,0	300	~ 2,0 kg.	0,85
SKP-L90/016-M05	16	M5	5,5	8,5	17,0	5,5	12,0	7,5	10,0	300	~ 3,3 kg.	1,35
SKP-L90/016-M06		M6	5,5	8,5	17,0	6,5	12,0	7,5	11,0	300	~ 3,4 kg.	1,35
SKP-L90/016-M08		M8	5,5	8,5	17,0	8,5	15,0	10,0	13,0	250	~ 3,0 kg.	1,35
SKP-L90/016-M10		M10	5,5	8,5	17,0	10,5	17,0	12,0	15,0	250	~ 2,9 kg.	1,60
SKP-L90/025-M05	25	M5	7,0	10,0	19,0	5,5	14,0	7,5	11,0	200	~ 3,3 kg.	1,90
SKP-L90/025-M06		M6	7,0	10,0	19,0	6,5	14,0	7,5	11,0	200	~ 3,3 kg.	1,90
SKP-L90/025-M08		M8	7,0	10,0	19,0	8,5	16,0	10,0	13,0	200	~ 3,2 kg.	1,90
SKP-L90/025-M10		M10	7,0	10,0	19,0	10,5	18,0	12,0	15,0	150	~ 2,6 kg.	2,10
SKP-L90/025-M12		M12	7,0	10,0	19,0	13,0	19,0	13,0	18,0	150	~ 2,3 kg.	2,25
SKP-L90/035-M06	35	M6	8,5	12,0	23,0	6,5	17,0	7,5	11,0	125	~ 3,0 kg.	2,80
SKP-L90/035-M08		M8	8,5	12,0	23,0	8,5	17,0	10,0	13,0	100	~ 2,5 kg.	2,80
SKP-L90/035-M10		M10	8,5	12,0	23,0	10,5	19,0	12,0	15,0	100	~ 2,7 kg.	3,30
SKP-L90/035-M12		M12	8,5	12,0	23,0	13,0	21,0	13,0	18,0	100	~ 2,7 kg.	3,50
SKP-L90/050-M06	50	M6	10,0	14,0	25,0	6,5	20,0	10,0	13,0	80	~ 3,0 kg.	4,30
SKP-L90/050-M08		M8	10,0	14,0	25,0	8,5	20,0	10,0	13,0	80	~ 3,0 kg.	4,30
SKP-L90/050-M10		M10	10,0	14,0	25,0	10,5	20,0	12,0	16,0	70	~ 2,8 kg.	4,40
SKP-L90/050-M12		M12	10,0	14,0	25,0	13,0	23,0	13,0	18,0	70	~ 2,8 kg.	4,50
SKP-L90/070-M06	70	M6	12,0	16,5	29,0	6,5	23,0	10,0	13,0	60	~ 3,2 kg.	5,20
SKP-L90/070-M08		M8	12,0	16,5	29,0	8,5	23,0	10,0	14,0	60	~ 3,1 kg.	5,20
SKP-L90/070-M10		M10	12,0	16,5	29,0	10,5	23,0	12,0	16,0	50	~ 2,9 kg.	5,20
SKP-L90/070-M12		M12	12,0	16,5	29,0	13,0	23,0	13,0	18,0	50	~ 2,7 kg.	5,40
SKP-L90/095-M08	95	M8	13,5	18,0	33,0	8,5	26,0	12,0	14,0	40	~ 2,7 kg.	6,35
SKP-L90/095-M10		M10	13,5	18,0	33,0	10,5	26,0	12,0	17,0	40	~ 2,8 kg.	6,35
SKP-L90/095-M12		M12	13,5	18,0	33,0	13,0	26,0	13,0	18,0	40	~ 2,8 kg.	6,35
SKP-L90/095-M16		M16	13,5	18,0	33,0	17,0	28,0	16,0	22,0	35	~ 2,5 kg.	6,50

ÜRÜN KODU Order Code	KABLO KESİTİ (mm²) Cable Section (mm²)	CIVATA DELİĞİ Bolt	BOYUTLAR Dimensions							KUTU ADEDİ Box Pcs.	KUTU AĞIRLIĞI Box Weight	BİRİM FİYATI TL Unit Price TL
			d1	d4	a	d2	b	c1	L3			
SKP-L90/120-M08	120	M8	15,0	19,5	36,0	8,5	28,0	14,0	16,0	30	~ 2,4 kg.	7,75
SKP-L90/120-M10		M10	15,0	19,5	36,0	10,5	28,0	14,0	17,0	30	~ 2,4 kg.	7,75
SKP-L90/120-M12		M12	15,0	19,5	36,0	13,0	28,0	14,0	18,0	30	~ 2,4 kg.	7,75
SKP-L90/120-M16		M16	15,0	19,5	36,0	17,0	30,0	16,0	22,0	25	~ 1,8 kg.	7,90
SKP-L90/150-M08	150	M8	16,5	21,0	40,0	8,5	31,0	14,0	16,0	25	~ 2,2 kg.	9,00
SKP-L90/150-M10		M10	16,5	21,0	40,0	10,5	31,0	14,0	17,0	25	~ 2,2 kg.	9,00
SKP-L90/150-M12		M12	16,5	21,0	40,0	13,0	31,0	15,0	18,0	25	~ 2,2 kg.	9,00
SKP-L90/150-M16		M16	16,5	21,0	40,0	17,0	31,0	16,0	22,0	20	~ 1,8 kg.	9,50
SKP-L90/150-M20		M20	16,5	21,0	40,0	21,0	36,0	22,0	24,0	20	~ 1,8 kg.	9,90
SKP-L90/185-M10	185	M10	19,0	24,0	42,0	10,5	35,0	18,0	22,0	20	~ 3,0 kg.	13,00
SKP-L90/185-M12		M12	19,0	24,0	42,0	13,0	35,0	18,0	22,0	20	~ 2,9 kg.	13,00
SKP-L90/185-M16		M16	19,0	24,0	42,0	17,0	35,0	18,0	22,0	15	~ 2,8 kg.	13,00
SKP-L90/185-M20		M20	19,0	24,0	42,0	21,0	39,0	22,0	24,0	15	~ 2,8, kg.	14,00
SKP-L90/240-M10	240	M10	21,0	26,0	45,0	10,5	39,0	21,5	22,0	15	~ 2,4 kg.	15,00
SKP-L90/240-M12		M12	21,0	26,0	45,0	13,0	39,0	21,5	22,0	15	~ 2,4 kg.	15,00
SKP-L90/240-M16		M16	21,0	26,0	45,0	17,0	39,0	21,5	22,0	10	~ 1,6 kg.	15,00
SKP-L90/240-M20		M20	21,0	26,0	45,0	21,0	39,0	21,5	24,0	10	~ 1,6 kg.	15,00
SKP-L90/300-M12	300	M12	23,5	29,5	56,0	13,0	43,0	24,0	24,0	8	~ 1,9 kg.	32,00
SKP-L90/300-M16		M16	23,5	29,5	56,0	17,0	43,0	24,0	24,0	8	~ 1,8 kg.	32,00
SKP-L90/300-M20		M20	23,5	29,5	56,0	21,0	43,0	24,0	24,0	8	~ 1,8 kg.	32,00
SKP-L90/400-M12	400	M12	27,0	34,0	60,0	13,0	49,0	24,0	24,0	6	~ 2,0 kg.	44,00
SKP-L90/400-M16		M16	27,0	34,0	60,0	17,0	49,0	24,0	24,0	6	~ 1,9 kg.	44,00
SKP-L90/400-M20		M20	27,0	34,0	60,0	21,0	49,0	24,0	24,0	6	~ 1,9 kg.	44,00

SKP-L90 Özellikleri

Hammadde Material	: :	**EN 13600 Bakır Boru** Electrolytic Copper Conformed To EN 13600
Kaplama Coating	: :	**Kalay** Tin Plated
Bağlantı Joint	: :	**Sıkma** Clamp Coupling
Boru Et Kalınlığı Thickness	: :	**Çok Kalın** Very Thick
Kablo Girişi Cable Entry	: :	**Uzun** Long

SKP-L 45

45° AÇILI KABLO PABUCU
KALIN TİP (S1)
EUROPE TYPE 45° ANGULAR CABLE LUGS

*5846 sayılı yasa gereği fotoğrafların izinsiz yayınlanması ve kullanılması kesinlikle yasaktır.

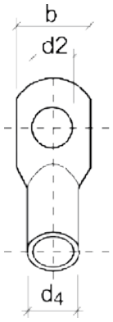

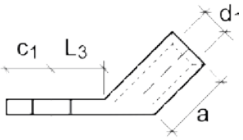

ÜRÜN KODU Order Code	KABLO KESİTİ (mm²) Cable Section (mm²)	CIVATA DELİĞİ Bolt	BOYUTLAR Dimensions							KUTU ADEDİ Box Pcs.	KUTU AĞIRLIĞI Box Weight	BİRİM FİYATI TL Unit Price TL
			d1	d4	a	d2	b	c1	L3			
SKP-L45/006-M05	6	M5	3,5	6,5	9,0	5,5	10,0	7,5	9,0	600	~ 3,6 kg.	0,70
SKP-L45/006-M06		M6	3,5	6,5	9,0	6,5	12,0	7,5	10,0	600	~ 3,7 kg.	0,70
SKP-L45/006-M08		M8	3,5	6,5	9,0	8,5	14,0	10,0	13,0	600	~ 3,8 kg.	0,75
SKP-L45/010-M05	10	M5	4,5	7,5	10,0	5,5	12,0	6,5	10,0	500	~ 2,4 kg.	0,80
SKP-L45/010-M06		M6	4,5	7,5	10,0	6,5	12,0	6,5	10,0	500	~ 2,8 kg.	0,80
SKP-L45/010-M08		M8	4,5	7,5	10,0	8,5	15,0	10,0	13,0	400	~ 3,6 kg.	0,85
SKP-L45/016-M05	16	M5	5,5	8,5	13,0	5,5	12,0	7,5	10,0	300	~ 3,1 kg.	1,35
SKP-L45/016-M06		M6	5,5	8,5	13,0	6,5	12,0	7,5	11,0	300	~ 3,1 kg.	1,35
SKP-L45/016-M08		M8	5,5	8,5	13,0	8,5	15,0	10,0	13,0	250	~ 2,9 kg.	1,35
SKP-L45/016-M10		M10	5,5	8,5	13,0	10,5	17,0	12,0	15,0	200	~ 3,2 kg.	1,60
SKP-L45/025-M05	25	M5	7,0	10,0	15,0	5,5	14,0	7,5	11,0	200	~ 3,9 kg.	1,90
SKP-L45/025-M06		M6	7,0	10,0	15,0	6,5	14,0	7,5	11,0	200	~ 2,8 kg.	1,90
SKP-L45/025-M08		M8	7,0	10,0	15,0	8,5	16,0	10,0	13,0	200	~ 3,0 kg.	1,90
SKP-L45/025-M10		M10	7,0	10,0	15,0	10,5	18,0	12,0	15,0	150	~ 2,5 kg.	2,10
SKP-L45/025-M12		M12	7,0	10,0	15,0	13,0	19,0	13,0	18,0	150	~ 2,5 kg.	2,25
SKP-L45/035-M06	35	M6	8,5	12,0	17,0	6,5	17,0	7,5	11,0	125	~ 3,0 kg.	2,80
SKP-L45/035-M08		M8	8,5	12,0	17,0	8,5	17,0	10,0	13,0	125	~ 3,0 kg.	2,80
SKP-L45/035-M10		M10	8,5	12,0	17,0	10,5	19,0	12,0	15,0	100	~ 2,5 kg.	3,30
SKP-L45/035-M12		M12	8,5	12,0	17,0	13,0	21,0	13,0	18,0	80	~ 2,4 kg.	3,50
SKP-L45/050-M06	50	M6	10,0	14,0	19,0	6,5	20,0	10,0	13,0	80	~ 2,9 kg.	4,30
SKP-L45/050-M08		M8	10,0	14,0	19,0	8,5	20,0	10,0	13,0	80	~ 2,9 kg.	4,30
SKP-L45/050-M10		M10	10,0	14,0	19,0	10,5	20,0	12,0	16,0	80	~ 3,0 kg.	4,40
SKP-L45/050-M12		M12	10,0	14,0	19,0	13,0	23,0	13,0	18,0	70	~ 3,0 kg.	4,40
SKP-L45/070-M06	70	M6	12,0	16,5	21,0	6,5	23,0	10,0	13,0	60	~ 3,2 kg.	5,20
SKP-L45/070-M08		M8	12,0	16,5	21,0	8,5	23,0	10,0	14,0	60	~ 3,0 kg.	5,20
SKP-L45/070-M10		M10	12,0	16,5	21,0	10,5	23,0	12,0	16,0	60	~ 3,2 kg.	5,20
SKP-L45/070-M12		M12	12,0	16,5	21,0	13,0	23,0	13,0	18,0	50	~ 2,7 kg.	5,40
SKP-L45/095-M08	95	M8	13,5	18,0	25,0	8,5	26,0	12,0	14,0	40	~ 2,5 kg.	6,35
SKP-L45/095-M10		M10	13,5	18,0	25,0	10,5	26,0	12,0	17,0	40	~ 2,6 kg.	6,35
SKP-L45/095-M12		M12	13,5	18,0	25,0	13,0	26,0	13,0	18,0	40	~ 2,8 kg.	6,35
SKP-L45/095-M16		M16	13,5	18,0	25,0	17,0	28,0	16,0	22,0	40	~ 2,8 kg.	6,50

ÜRÜN KODU Order Code	KABLO KESİTİ (mm²) Cable Section (mm²)	CIVATA DELİĞİ Bolt	BOYUTLAR Dimensions d1	d4	a	d2	b	c1	L3	KUTU ADEDİ Box Pcs.	KUTU AĞIRLIĞI Box Weight	BİRİM FİYATI TL Unit Price TL
SKP-L45/120-M08	120	M8	15,0	19,5	26,0	8,5	28,0	14,0	16,0	30	~ 2,3 kg.	7,75
SKP-L45/120-M10		M10	15,0	19,5	26,0	10,5	28,0	14,0	17,0	30	~ 2,3 kg.	7,75
SKP-L45/120-M12		M12	15,0	19,5	26,0	13,0	28,0	14,0	18,0	30	~ 2,3 kg.	7,75
SKP-L45/120-M16		M16	15,0	19,5	26,0	17,0	30,0	16,0	22,0	30	~ 2,2 kg.	7,90
SKP-L45/150-M08	150	M8	16,5	21,0	30,0	8,5	31,0	14,0	16,0	25	~ 2,4 kg.	9,00
SKP-L45/150-M10		M10	16,5	21,0	30,0	10,5	31,0	14,0	17,0	25	~ 2,2 kg.	9,00
SKP-L45/150-M12		M12	16,5	21,0	30,0	13,0	31,0	15,0	18,0	25	~ 2,4 kg.	9,00
SKP-L45/150-M16		M16	16,5	21,0	30,0	17,0	31,0	16,0	22,0	25	~ 2,3 kg.	9,50
SKP-L45/150-M20		M20	16,5	21,0	30,0	21,0	36,0	22,0	24,0	25	~ 2,2 kg.	9,90
SKP-L45/185-M10	185	M10	19,0	24,0	30,0	10,5	35,0	18,0	22,0	20	~ 2,7 kg.	13,00
SKP-L45/185-M12		M12	19,0	24,0	30,0	13,0	35,0	18,0	22,0	20	~ 2,7 kg.	13,00
SKP-L45/185-M16		M16	19,0	24,0	30,0	17,0	35,0	18,0	22,0	20	~ 2,4 kg.	13,00
SKP-L45/185-M20		M20	19,0	24,0	30,0	21,0	39,0	22,0	24,0	20	~ 2,4 kg.	14,00
SKP-L45/240-M10	240	M10	21,0	26,0	35,0	10,5	39,0	21,5	22,0	15	~ 2,4 kg.	15,00
SKP-L45/240-M12		M12	21,0	26,0	35,0	13,0	39,0	21,5	22,0	15	~ 2,5 kg.	15,00
SKP-L45/240-M16		M16	21,0	26,0	35,0	17,0	39,0	21,5	22,0	15	~ 2,4 kg.	15,00
SKP-L45/240-M20		M20	21,0	26,0	35,0	21,0	39,0	21,5	24,0	15	~ 2,3 kg.	15,00
SKP-L45/300-M12	300	M12	23,5	29,5	44,0	13,0	43,0	24,0	24,0	8	~ 2,1 kg.	32,00
SKP-L45/300-M16		M16	23,5	29,5	44,0	17,0	43,0	24,0	24,0	8	~ 2,1 kg.	32,00
SKP-L45/300-M20		M20	23,5	29,5	44,0	21,0	43,0	24,0	24,0	8	~ 2,1 kg.	32,00
SKP-L45/400-M12	400	M12	27,0	34,0	44,0	13,0	49,0	24,0	24,0	6	~ 2,1 kg.	44,00
SKP-L45/400-M16		M16	27,0	34,0	44,0	17,0	49,0	24,0	24,0	6	~ 2,1 kg.	44,00
SKP-L45/400-M20		M20	27,0	34,0	44,0	21,0	49,0	24,0	24,0	6	~ 2,0 kg.	44,00

SKP-L45 Özellikleri

Hammadde Material	:	**EN 13600 Bakır Boru** Electrolytic Copper Conformed To EN 13600
Kaplama Coating	:	**Kalay** Tin Plated
Bağlantı Joint	:	**Sıkma** Clamp Coupling
Boru Et Kalınlığı Thickness	:	**Çok Kalın** Very Thick
Kablo Girişi Cable Entry	:	**Uzun** Long

SKP-C

ÇİFT DELİKLİ SIKMALI KABLO PABUCU
TUBULAR CABLE LUGS WITH TWO CONNECTION HOLES

*5846 sayılı yasa gereği fotoğrafların izinsiz yayınlanması ve kullanılması kesinlikle yasaktır.

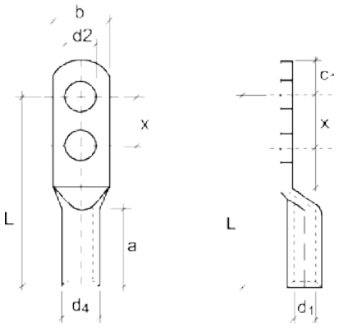

ÜRÜN KODU Order Code	KABLO KESİTİ (mm²) Cable Section (mm²)	CIVATA DELİĞİ Bolt	BOYUTLAR Dimensions								KUTU ADEDİ Box Pcs.	KUTU AĞIRLIĞI Box Weight	BİRİM FİYATI TL Unit Price TL
			d1	d4	a	d2	b	c1	x	L			
SKP-C/016-M06/X16	16	M6	5,5	8,5	20,0	6,4	12,0	10,0	16,0	53,0	150		2,10
SKP-C/016-M06/X25		M6	5,5	8,5	20,0	7,0	12,0	10,0	25,0	62,0	150	~ 2,3 kg.	2,50
SKP-C/025-M06/X16	25	M6	7,0	10,0	20,0	6,4	14,0	10,0	16,0	54,0	100		2,60
SKP-C/025-M06/X25		M6	7,0	10,0	20,0	7,0	14,0	10,0	25,0	63,0	100	~ 2,1 kg.	3,15
SKP-C/025-M08/X16		M8	7,0	10,0	20,0	8,5	14,0	10,0	16,0	54,0	100		2,60
SKP-C/025-M08/X25		M8	7,0	10,0	20,0	8,5	14,0	10,0	25,0	63,0	100	~ 2,1 kg.	3,15
SKP-C/035-M08/X16	35	M8	8,5	12,0	20,0	8,5	18,0	10,0	16,0	62,0	80		4,30
SKP-C/035-M08/X25		M8	8,5	12,0	20,0	8,5	18,0	10,0	25,0	71,0	80		4,60
SKP-C/035-M08/X40		M8	8,5	12,0	20,0	8,5	18,0	10,0	40,0	86,0	70		5,30
SKP-C/035-M10/X25		M10	8,5	12,0	20,0	10,5	18,0	10,0	25,0	71,0	80	~ 2,9 kg.	4,60
SKP-C/035-M10/X40		M10	8,5	12,0	20,0	10,5	18,0	10,0	40,0	86,0	70		5,30
SKP-C/050-M06/X25	50	M6	10,0	14,0	28,0	6,5	21,0	10,0	25,0	69,0	50		8,00
SKP-C/050-M06/X40		M6	10,0	14,0	28,0	6,5	21,0	10,0	40,0	84,0	50		9,20
SKP-C/050-M08/X25		M8	10,0	14,0	28,0	8,5	21,0	10,0	25,0	69,0	50		8,00
SKP-C/050-M08/X40		M8	10,0	14,0	28,0	8,5	21,0	10,0	40,0	84,0	50		9,20
SKP-C/050-M10/X25		M10	10,0	14,0	28,0	10,5	21,0	16,0	25,0	75,0	50	~ 2,8 kg.	8,00
SKP-C/050-M10/X40		M10	10,0	14,0	28,0	10,5	21,0	16,0	40,0	90,0	50		9,20
SKP-C/050-M12/X25		M12	10,0	14,0	28,0	13,0	23,0	16,0	25,0	75,0	50		8,00
SKP-C/050-M12/X40		M12	10,0	14,0	28,0	13,0	23,0	16,0	40,0	90,0	50		9,20
SKP-C/070-M08/X25	70	M8	12,0	16,5	28,0	8,5	23,0	10,0	25,0	76,0	40		9,25
SKP-C/070-M08/X40		M8	12,0	16,5	28,0	8,5	23,0	10,0	40,0	91,0	40		10,75
SKP-C/070-M10/X25		M10	12,0	16,5	28,0	10,5	23,0	16,0	25,0	82,0	40	~ 3,2 kg.	9,25
SKP-C/070-M10/X40		M10	12,0	16,5	28,0	10,5	23,0	16,0	40,0	97,0	40		10,75
SKP-C/070-M12/X25		M12	12,0	16,5	28,0	13,0	23,0	16,0	25,0	76,0	40		9,25
SKP-C/070-M12/X40		M12	12,0	16,5	28,0	13,0	23,0	16,0	40,0	91,0	40		10,75
SKP-C/070-M12/X45		M12	12,0	16,5	28,0	13,0	23,0	16,0	45,0	96,0	40		11,00
SKP-C/070-M12/X60		M12	12,0	16,5	28,0	13,0	23,0	16,0	60,0	111,0	40		12,50
SKP-C/095-M10/X25	95	M10	13,5	18,0	35,0	10,5	26,0	16,0	25,0	87,0	25	~ 2,4 kg.	10,85
SKP-C/095-M10/X40		M10	13,5	18,0	35,0	10,5	26,0	16,0	40,0	102,0	25		11,85
SKP-C/095-M12/X25		M12	13,5	18,0	35,0	13,0	26,0	16,0	25,0	87,0	25		10,85
SKP-C/095-M12/X40		M12	13,5	18,0	35,0	13,0	26,0	16,0	40,0	102,0	25		11,85
SKP-C/095-M12/X45		M12	13,5	18,0	35,0	13,0	26,0	16,0	45,0	107,0	25		12,10
SKP-C/095-M12/X60		M12	13,5	18,0	35,0	13,0	26,0	16,0	60,0	122,0	25		13,10

ÜRÜN KODU Order Code	KABLO KESİTİ (mm²) Cable Section (mm²)	CIVATA DELİĞİ Bolt	BOYUTLAR Dimensions d1	d4	a	d2	b	c1	x	L	KUTU ADEDİ Box Pcs.	KUTU AĞIRLIĞI Box Weight	BİRİM FİYATI TL Unit Price TL
SKP-C/120-M12/X25	120	M12	15,0	19,5	35,0	13,0	28,0	16,0	25,0	87,0	25	~ 2,6 kg.	11,40
SKP-C/120-M12/X40		M12	15,0	19,5	35,0	13,0	28,0	16,0	40,0	102,0	25	~ 3,1 kg.	12,40
SKP-C/120-M12/X45		M12	15,0	19,5	35,0	13,0	28,0	16,0	45,0	107,0	25		13,00
SKP-C/120-M12/X60		M12	15,0	19,5	35,0	13,0	28,0	16,0	60,0	122,0	25		14,00
SKP-C/120-M16/X40		M16	15,0	19,5	35,0	17,0	28,0	19,0	40,0	105,0	25		12,40
SKP-C/120-M16/X50		M16	15,0	19,5	35,0	17,0	28,0	19,0	50,0	115,0	25		13,50
SKP-C/150-M12/X25	150	M12	16,5	21,0	35,0	13,0	31,0	16,0	25,0	90,0	20	~ 2,3 kg.	12,60
SKP-C/150-M12/X40		M12	16,5	21,0	35,0	13,0	31,0	16,0	40,0	105,0	20		13,50
SKP-C/150-M12/X45		M12	16,5	21,0	35,0	13,0	31,0	16,0	45,0	110,0	20		13,75
SKP-C/150-M12/X50		M12	16,5	21,0	35,0	13,0	31,0	16,0	50,0	115,0	20	~ 2,8 kg.	14,00
SKP-C/150-M12/X60		M12	16,5	21,0	35,0	13,0	31,0	16,0	60,0	125,0	20		15,75
SKP-C/150-M16/X40		M16	16,5	21,0	35,0	17,0	31,0	19,0	40,0	108,0	20		13,50
SKP-C/150-M16/X50		M16	16,5	21,0	35,0	17,0	31,0	19,0	50,0	118,0	20		14,00
SKP-C/185-M12/X25	185	M12	19,0	24,0	40,0	13,0	35,0	16,0	25,0	96,0	12	~ 1,9 kg.	16,00
SKP-C/185-M12/X40		M12	19,0	24,0	40,0	13,0	35,0	16,0	40,0	111,0	12	~ 2,4 kg.	17,20
SKP-C/185-M12/X45		M12	19,0	24,0	40,0	13,0	35,0	16,0	45,0	116,0	12		17,85
SKP-C/185-M12/X50		M12	19,0	24,0	40,0	13,0	35,0	16,0	50,0	121,0	12		18,55
SKP-C/185-M12/X60		M12	19,0	24,0	40,0	13,0	35,0	16,0	60,0	131,0	12		19,90
SKP-C/185-M16/X40		M16	19,0	24,0	40,0	17,0	35,0	19,0	40,0	114,0	12		18,00
SKP-C/185-M16/X50		M16	19,0	24,0	40,0	17,0	35,0	19,0	50,0	124,0	12		19,35
SKP-C/240-M12/X25	240	M12	21,0	26,0	40,0	13,0	38,0	16,0	25,0	97,0	12	~ 2,1 kg.	22,50
SKP-C/240-M12/X40		M12	21,0	26,0	40,0	13,0	38,0	16,0	40,0	112,0	12		23,80
SKP-C/240-M12/X45		M12	21,0	26,0	40,0	13,0	38,0	16,0	45,0	117,0	12		24,20
SKP-C/240-M12/X50		M12	21,0	26,0	40,0	13,0	38,0	16,0	50,0	122,0	12		24,65
SKP-C/240-M12/X60		M12	21,0	26,0	40,0	13,0	38,0	16,0	60,0	132,0	12		25,00
SKP-C/240-M16/X40		M16	21,0	26,0	40,0	17,0	38,0	19,0	40,0	115,0	12		24,20
SKP-C/240-M16/X50		M16	21,0	26,0	40,0	17,0	38,0	19,0	50,0	125,0	12		24,65

Talep edilmesi durumunda 45 ve 90 derece üretimimiz bulunmaktadır.
Upon request, it is available in 45 & 95 degrees.

SKP-C Özellikleri

Hammadde Material	:	**EN 13600 Bakır Boru** Electrolytic Copper Conformed To EN 13600
Kaplama Coating	:	**Kalay** Tin Plated
Bağlantı Joint	:	**Sıkma** Clamp Coupling
Boru Et Kalınlığı Thickness	:	**Çok Kalın** Very Thick
Kablo Girişi Cable Entry	:	**Uzun** Long

SEM-A

SIKMALI EK MUFLAR
BUTT CONNECTORS

*5846 sayılı yasa gereği fotoğrafların izinsiz yayınlanması ve kullanılması kesinlikle yasaktır.

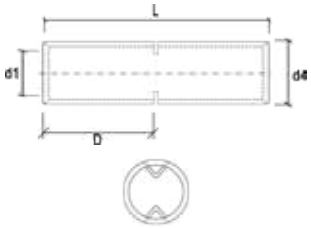

ÜRÜN KODU Order Code	KABLO KESİTİ (mm²) Cable Section (mm²)	BOYUTLAR Dimensions d1	d4	L	D	KUTU ADEDİ Box Pcs.	KUTU AĞIRLIĞI Box Weight	BİRİM FİYATI TL Unit Price TL
SEM-A/006	6	4,0	5,5	25,0	12,5	800	~ 2,1 kg.	0,40
SEM-A/010	10	4,5	6,0	30,0	15,0	600	~ 2,1 kg.	0,45
SEM-A/016	16	5,5	7,5	35,0	17,5	300	~ 2,0 kg.	0,60
SEM-A/025	25	7,0	9,5	40,0	20,0	200	~ 2,4 kg.	1,05
SEM-A/035	35	8,5	11,0	45,0	22,5	150	~ 2,2 kg.	1,40
SEM-A/050	50	10,0	13,0	50,0	25,0	125	~ 3,0 kg.	2,40
SEM-A/070	70	11,5	14,5	55,0	27,5	80	~ 2,4 kg.	3,20
SEM-A/095	95	13,5	16,5	60,0	30,0	60	~ 2,3 kg.	3,30
SEM-A/120	120	14,5	18,0	65,0	32,5	40	~ 2,1 kg.	4,70
SEM-A/150	150	16,5	21,0	70,0	35,0	30	~ 2,6 kg.	7,50
SEM-A/185	185	18,5	23,0	75,0	37,5	20	~ 2,0 kg.	9,00
SEM-A/240	240	21,0	26,0	85,0	42,5	15	~ 2,1 kg.	12,50
SEM-A/300	300	23,5	28,5	100,0	50,0	10	~ 1,9 kg.	14,00
SEM-A/400	400	27,0	33,0	110,0	55,0	6	~ 1,5 kg.	24,00
SEM-A/500	500	30,0	38,0	120,0	60,0	4	~ 1,7 kg.	38,00
SEM-A/625	625	34,0	42,0	130,0	65,0	3	~ 1,7 kg.	60,00

SEM-A Özellikleri

Hammadde	:	**EN 13600 Bakır Boru**
Material	:	Electrolytic Copper Conformed To EN 13600
Kaplama	:	**Kalay**
Coating	:	Tin Plated
Bağlantı	:	**Sıkma + Lehim**
Joint	:	Clamp Coupling
Boru Et Kalınlığı	:	**Kalın**
Thickness	:	Thick

SEM-D

SIKMALI EK MUFLAR DIN 46267
BUTT CONNECTORS DIN 46267

*5846 sayılı yasa gereği fotoğrafların izinsiz yayınlanması ve kullanılması kesinlikle yasaktır.

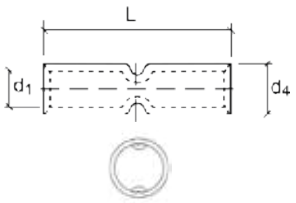

ÜRÜN KODU Order Code	KABLO KESİTİ (mm²) Cable Section (mm²)	BOYUTLAR Dimensions d1	d4	L	KUTU ADEDİ Box Pcs.	KUTU AĞIRLIĞI Box Weight	BİRİM FİYATI TL Unit Price TL
SEM-D/006	6	3,8	5,5	30,0	700	~ 2,4 kg.	0,40
SEM-D/010	10	4,5	6,0	30,0	600	~ 1,9 kg.	0,45
SEM-D/016	16	5,5	8,5	50,0	200	~ 2,9 kg.	1,30
SEM-D/025	25	7,0	10,0	50,0	150	~ 2,7 kg.	1,65
SEM-D/035	35	8,2	12,5	50,0	125	~ 3,9 kg.	2,90
SEM-D/050	50	10,0	14,5	56,0	80	~ 3,4 kg.	4,10
SEM-D/070	70	11,5	16,5	56,0	50	~ 2,7 kg.	5,00
SEM-D/095	95	13,5	19,0	70,0	35	~ 3,1 kg.	7,00
SEM-D/120	120	15,5	21,0	70,0	25	~ 2,4 kg.	7,50
SEM-D/150	150	17,0	23,5	80,0	20	~ 2,9 kg.	11,00
SEM-D/185	185	19,0	25,5	85,0	12	~ 2,1 kg.	13,00
SEM-D/240	240	21,5	29,0	90,0	10	~ 2,4 kg.	18,00
SEM-D/300	300	24,5	32,0	100,0	8	~ 2,4 kg.	24,00
SEM-D/400	400	27,5	38,5	150,0	4	~ 3,0 kg.	55,00
SEM-D/500	500	31,0	42,0	160,0	2	~ 1,8 kg.	65,00
SEM-D/625	625	34,5	44,0	160,0	3	~ 1,6 kg.	70,00
SEM-D/800	800	40,0	52,0	200,0	1	~ 1,5 kg.	
SEM-D/1000	1000	44,0	58,0	200,0	1	~ 2,0 kg.	

SEM-D Özellikleri

Hammadde	:	**EN 13600 Bakır Boru**
Material	:	Electrolytic Copper Conformed To EN 13600
Kaplama	:	**Kalay**
Coating	:	Tin Plated
Bağlantı	:	**Sıkma**
Joint	:	Clamp Coupling

DIN Normu 46267'ye uygundur
Conformed to DIN 46167

SKP-D1

KAYNAKLI TİP KABLO PABUCU DIN 46234
WELDED TUBE TERMINALS DIN 46234

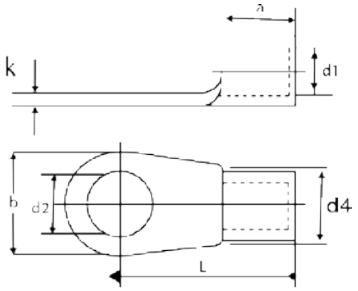

*5846 sayılı yasa gereği fotoğrafların izinsiz yayınlanması ve kullanılması kesinlikle yasaktır.

ÜRÜN KODU Order Code	KABLO KESİTİ (mm²) Cable Section (mm²)	CIVATA DELİĞİ Bolt	BOYUTLAR Dimensions d1	a	d2	b	L	KUTU ADEDİ Box Pcs.	KUTU AĞIRLIĞI Box Weight	BİRİM FİYATI TL Unit Price TL
SKP-D1/001.5-M02.5		M2.5	1,6	5,0	2,8	6,0	11,0	1.000		
SKP-D1/001.5-M03		M3	1,6	5,0	3,2	6,0	11,0	1.000		
SKP-D1/001.5-M03.5		M3.5	1,6	5,0	3,7	6,0	11,0	1.000		
SKP-D1/001.5-M04	1,5	M4	1,6	5,0	4,3	8,0	12,0	1.000		
SKP-D1/001.5-M05		M5	1,6	5,0	5,3	10,0	13,0	1.000		
SKP-D1/001.5-M06		M6	1,6	5,0	6,5	11,0	15,0	1.000		
SKP-D1/001.5-M08		M8	1,6	5,0	8,4	14,0	17,0	1.000		
SKP-D1/002.5-M03		M3	2,3	5,0	3,2	6,0	11,0	1.000		
SKP-D1/002.5-M03.5		M3.5	2,3	5,0	3,7	6,0	11,0	1.000		
SKP-D1/002.5-M04		M4	2,3	5,0	4,3	8,0	12,0	1.000		
SKP-D1/002.5-M05	2,5	M5	2,3	5,0	5,3	10,0	14,0	1.000		
SKP-D1/002.5-M06		M6	2,3	5,0	6,5	11,0	16,0	1.000		
SKP-D1/002.5-M08		M8	2,3	5,0	8,4	14,0	17,0	1.000		
SKP-D1/002.5-M10		M10	2,3	5,0	10,5	15,0	17,0	1.000		
SKP-D1/006-M04		M4	3,6	6,0	4,3	8,0	14,0	100		
SKP-D1/006-M05		M5	3,6	6,0	5,3	10,0	15,0	100		
SKP-D1/006-M06	6	M6	3,6	6,0	6,5	11,0	16,0	100		
SKP-D1/006-M08		M8	3,6	6,0	8,4	14,0	19,0	100		
SKP-D1/006-M10		M10	3,6	6,0	10,5	18,0	21,0	100		
SKP-D1/006-M12		M12	3,6	6,0	13,0	18,0	21,0	100		
SKP-D1/010-M04		M4	4,5	8,0	4,3	10,0	16,0	100		
SKP-D1/010-M05		M5	4,5	8,0	5,3	10,0	16,0	100		
SKP-D1/010-M06	10	M6	4,5	8,0	6,5	11,0	17,0	100		
SKP-D1/010-M08		M8	4,5	8,0	8,4	14,0	20,0	100		
SKP-D1/010-M10		M10	4,5	8,0	10,5	18,0	21,0	100		
SKP-D1/010-M12		M12	4,5	8,0	13,0	22,0	23,0	100		
SKP-D1/016-M05		M5	5,8	10,0	5,3	11,0	20,0	100		
SKP-D1/016-M06		M6	5,8	10,0	6,5	11,0	20,0	100		
SKP-D1/016-M08	16	M8	5,8	10,0	8,4	14,0	22,0	100		
SKP-D1/016-M10		M10	5,8	10,0	10,5	18,0	24,0	100		
SKP-D1/016-M12		M12	5,8	10,0	13,0	22,0	26,0	100		

ÜRÜN KODU Order Code	KABLO KESİTİ (mm²) Cable Section (mm²)	CIVATA DELİĞİ Bolt	BOYUTLAR Dimensions					KUTU ADEDİ Box Pcs.	KUTU AĞIRLIĞI Box Weight	BİRİM FİYATI TL Unit Price TL
			d1	a	d2	b	L			
SKP-D1/025-M05	25	M5	7,5	11,0	5,3	12,0	25,0	100		
SKP-D1/025-M06		M6	7,5	11,0	6,5	12,0	25,0	100		
SKP-D1/025-M08		M8	7,5	11,0	8,4	16,0	25,0	100		
SKP-D1/025-M10		M10	7,5	11,0	10,5	18,0	26,0	100		
SKP-D1/025-M12		M12	7,5	11,0	13,0	22,0	31,0	100		
SKP-D1/025-M14		M14	7,5	11,0	15,0	22,0	35,0	100		
SKP-D1/025-M16		M16	7,5	11,0	17,0	28,0	35,0	100		
SKP-D1/035-M06	35	M6	9,0	12,0	6,5	15,0	26,0	100		
SKP-D1/035-M08		M8	9,0	12,0	8,4	16,0	26,0	100		
SKP-D1/035-M10		M10	9,0	12,0	10,5	18,0	27,0	100		
SKP-D1/035-M12		M12	9,0	12,0	13,0	22,0	31,0	100		
SKP-D1/035-M14		M14	9,0	12,0	15,0	22,0	31,0	100		
SKP-D1/035-M16		M16	9,0	12,0	17,0	28,0	36,0	100		
SKP-D1/050-M06	50	M6	11,0	16,0	6,5	18,0	34,0	100		
SKP-D1/050-M08		M8	11,0	16,0	8,4	18,0	34,0	100		
SKP-D1/050-M10		M10	11,0	16,0	10,5	18,0	34,0	100		
SKP-D1/050-M12		M12	11,0	16,0	13,0	22,0	36,0	100		
SKP-D1/050-M14		M14	11,0	16,0	15,0	22,0	36,0	100		
SKP-D1/050-M16		M16	11,0	16,0	17,0	28,0	40,0	100		
SKP-D1/070-M06	70	M6	13,0	18,0	6,5	22,0	38,0	100		
SKP-D1/070-M08		M8	13,0	18,0	8,4	22,0	38,0	100		
SKP-D1/070-M10		M10	13,0	18,0	10,5	22,0	38,0	100		
SKP-D1/070-M12		M12	13,0	18,0	13,0	22,0	38,0	100		
SKP-D1/070-M14		M14	13,0	18,0	15,0	22,0	38,0	100		
SKP-D1/070-M16		M16	13,0	18,0	17,0	28,0	42,0	100		
SKP-D1/095-M08	95	M8	15,0	20,0	8,4	24,0	42,0	100		
SKP-D1/095-M10		M10	15,0	20,0	10,5	24,0	42,0	100		
SKP-D1/095-M12		M12	15,0	20,0	13,0	24,0	42,0	100		
SKP-D1/095-M14		M14	15,0	20,0	15,0	24,0	42,0	100		
SKP-D1/095-M16		M16	15,0	20,0	17,0	28,0	44,0	100		
SKP-D1/120-M08	120	M8	16,5	22,0	8,4	24,0	44,0	100		
SKP-D1/120-M10		M10	16,5	22,0	10,5	24,0	44,0	100		
SKP-D1/120-M12		M12	16,5	22,0	13,0	24,0	44,0	100		
SKP-D1/120-M14		M14	16,5	22,0	15,0	24,0	44,0	100		
SKP-D1/120-M16		M16	16,5	22,0	17,0	28,0	48,0	100		
SKP-D1/150-M10	150	M10	19,0	24,0	10,5	30,0	50,0	100		
SKP-D1/150-M12		M12	19,0	24,0	13,0	30,0	50,0	100		
SKP-D1/150-M14		M14	19,0	24,0	15,0	30,0	50,0	100		
SKP-D1/150-M16		M16	19,0	24,0	17,0	30,0	50,0	100		
SKP-D1/185-M10	185	M10	21,0	28,0	10,5	36,0	50,0	100		
SKP-D1/185-M12		M12	21,0	28,0	13,0	36,0	50,0	100		
SKP-D1/185-M14		M14	21,0	28,0	15,0	36,0	50,0	100		
SKP-D1/185-M16		M16	21,0	28,0	17,0	36,0	50,0	100		
SKP-D1/240-M10	240	M10	23,5	32,0	10,5	38,0	56,0	100		
SKP-D1/240-M12		M12	23,5	32,0	13,0	38,0	56,0	100		
SKP-D1/240-M14		M14	23,5	32,0	15,0	38,0	56,0	100		
SKP-D1/240-M16		M16	23,5	32,0	17,0	38,0	56,0	100		

SKP-D1 Özellikleri

Hammadde Material	:	**E-CU Şerit** E-CU Copper
Kaplama Coating	:	**Kalay** Tin Plated
Bağlantı Joint	:	**Sıkma** Clamp Coupling
Norm Conformed to	:	**DIN 46234** DIN 46234

AKP-D

ALÜMİNYUM KABLO PABUCU DIN 46329
ALUMINIUM CABLE LUG DIN 46329

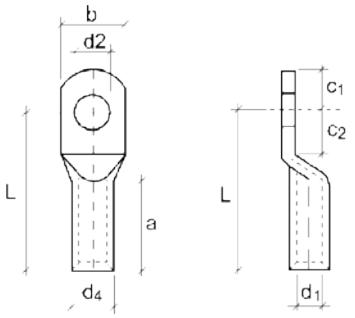

*5846 sayılı yasa gereği fotoğrafların izinsiz yayınlanması ve kullanılması kesinlikle yasaktır.

ÜRÜN KODU Order Code	KABLO KESİTİ (mm²) Cable Section (mm²)	CIVATA DELİĞİ Bolt	BOYUTLAR Dimensions d1	d4	a	d2	b	c1	c2	L	L+c1	KUTU ADEDİ Box Pcs.	KUTU AĞIRLIĞI Box Weight	BİRİM FİYATI TL Unit Price TL
AKP-D/016-M08/SD	**16**	**M8**	**5,8**	**12,0**	**34,0**	**8,5**	**18,0**	**10,0**	**11,5**	**52,0**	**62,0**	**100**	**~ 1,3 kg.**	**0,60**
AKP-D/016-M10		M10	5,8	12,0	34,0	10,5	18,0	10,0	11,5	52,0	62,0	100	~ 1,3 kg.	0,60
AKP-D/025-M08/SD		**M8**	**6,8**	**12,0**	**40,0**	**8,5**	**18,0**	**10,0**	**11,5**	**60,0**	**70,0**	**80**	**~ 1,1 kg.**	**0,80**
AKP-D/025-M10	**25**	M10	6,8	12,0	40,0	10,5	19,0	12,0	12,0	60,0	72,0	80	~ 1,1 kg.	0,80
AKP-D/025-M12		M12	6,8	12,0	40,0	13,0	21,0	13,0	13,0	60,0	73,0	80	~ 1,1 kg.	0,80
AKP-D/035-M08		M8	8,0	14,0	43,0	8,5	21,0	11,5	14,0	67,0	78,5	60	~ 1,3 kg.	1,00
AKP-D/035-M10/SD	**35**	**M10**	**8,0**	**14,0**	**43,0**	**10,5**	**21,0**	**11,5**	**14,0**	**67,0**	**78,5**	**60**	**~ 1,3 kg.**	**1,00**
AKP-D/035-M12		M12	8,0	14,0	43,0	13,0	21,0	11,5	14,0	67,0	78,5	60	~ 1,2 kg.	1,00
AKP-D/035-M14		M14	8,0	14,0	43,0	15,0	21,0	12,0	16,0	69,0	81,0	60	~ 1,3 kg.	1,00
AKP-D/050-M10/SD	**50**	**M10**	**9,8**	**16,0**	**46,0**	**10,5**	**25,0**	**14,0**	**15,0**	**72,0**	**86,0**	**40**	**~ 1,1 kg.**	**1,50**
AKP-D/050-M12		M12	9,8	16,0	46,0	13,0	25,0	14,0	15,0	72,0	86,0	40	~ 1,1 kg.	1,50
AKP-D/070-M10/SD	**70**	**M10**	**11,2**	**18,5**	**54,0**	**10,5**	**28,0**	**15,0**	**17,5**	**86,0**	**101,0**	**25**	**~ 1,4 kg.**	**2,00**
AKP-D/070-M12		M12	11,2	18,5	54,0	13,0	28,0	15,0	17,5	86,0	101,0	25	~ 1,1 kg.	2,00
AKP-D/095-M10		M10	13,2	22,0	59,0	10,5	32,0	15,5	17,5	90,0	105,5	15	~ 1,0 kg.	3,00
AKP-D/095-M12/SD	**95**	**M12**	**13,2**	**22,0**	**59,0**	**13,0**	**32,0**	**15,5**	**17,5**	**90,0**	**105,5**	**15**	**~ 1,0 kg.**	**3,00**
AKP-D/095-M16		M16	13,2	22,0	59,0	17,0	34,0	15,5	17,5	90,0	105,5	15	~ 1,0 kg.	3,00
AKP-D/120-M12/SD	**120**	**M12**	**14,7**	**23,0**	**59,0**	**13,0**	**32,0**	**16,0**	**17,5**	**91,0**	**107,0**	**15**	**~ 1,0 kg.**	**3,50**
AKP-D/120-M16		M16	14,7	23,0	59,0	17,0	34,0	16,0	17,5	91,0	107,0	15	~ 1,3 kg.	3,50
AKP-D/150-M12/SD		**M12**	**16,3**	**25,0**	**62,0**	**13,0**	**35,0**	**17,5**	**20,0**	**103,0**	**120,5**	**12**	**~ 1,1 kg.**	**4,50**
AKP-D/150-M16	**150**	M16	16,3	25,0	62,0	17,0	35,0	17,5	20,0	103,0	120,5	12	~ 1,1 kg.	4,50
AKP-D/150-M20		M20	16,3	25,0	62,0	21,0	41,0	17,5	20,0	103,0	120,5	12	~ 1,1 kg.	4,50
AKP-D/185-M12		M12	18,3	28,5	63,0	13,0	40,0	19,0	20,0	106,0	125,0	8	~ 1,0 kg.	6,00
AKP-D/185-M16/SD	**185**	**M16**	**18,3**	**28,5**	**63,0**	**17,0**	**40,0**	**19,0**	**20,0**	**106,0**	**125,0**	**8**	**~ 1,0 kg.**	**6,00**
AKP-D/185-M20		M20	18,3	28,5	63,0	21,0	40,0	19,0	20,0	106,0	125,0	8	~ 1,1 kg.	6,00
AKP-D/240-M12		M12	21,0	32,0	72,0	13,0	45,0	23,0	24,0	116,0	139,0	8	~ 1,4 kg.	8,00
AKP-D/240-M16/SD	**240**	**M16**	**21,0**	**32,0**	**72,0**	**17,0**	**45,0**	**23,0**	**24,0**	**116,0**	**139,0**	**8**	**~ 1,4 kg.**	**8,00**
AKP-D/240-M20		M20	21,0	32,0	72,0	21,0	45,0	23,0	24,0	116,0	139,0	8	~ 1,4 kg.	8,00
AKP-D/300-M16/SD	**300**	**M16**	**23,3**	**34,0**	**74,0**	**17,0**	**49,0**	**24,0**	**25,0**	**124,0**	**148,0**	**5**	**~ 1,0 kg.**	**11,00**
AKP-D/300-M20		M20	23,3	34,0	74,0	21,0	49,0	24,0	25,0	124,0	148,0	5	~ 1,0 kg.	11,00
AKP-D/400-M16/SD	**400**	**M16**	**26,0**	**38,5**	**105,0**	**17,0**	**58,0**	**30,0**	**32,0**	**166,0**	**196,0**	**10**	**~ 3,3 kg.**	**20,00**
AKP-D/400-M20		M20	26,0	38,5	105,0	21,0	58,0	30,0	32,0	166,0	196,0	10	~ 3,3 kg.	20,00

AKP-D Özellikleri

Hammadde	:	**Elektrolitik Alüminyum**
Material	:	Electrolytic Aluminium
Kaplama	:	**Doğal Parlak**
Coating	:	Natural Bright
Bağlantı	:	**Sıkma**
Joint	:	Clamp Coupling

DIN Normu 46329'a uygundur
Conformed to DIN 46329

Bu tabloda koyu yazı karakteri ile belirtilmiş olan kablo pabuçları standart üretimimizdir.
The cable lugs which are indicated in bold font, are standart products of Simpa

AKP-DY

ALÜMİNYUM KABLO PABUCU OKSİT KORUMA YAĞLI DIN 46329
ALUMINIUM CABLE LUGS WITH OXIDE PROTECTION OIL DIN 46329

*5846 sayılı yasa gereği fotoğrafların izinsiz yayınlanması ve kullanılması kesinlikle yasaktır.

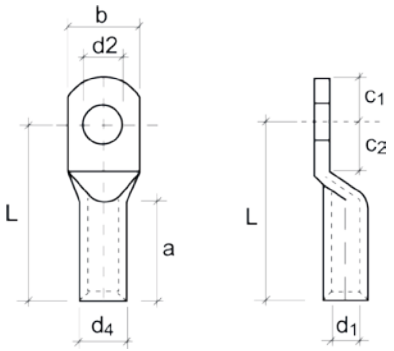

ÜRÜN KODU Order Code	KABLO KESİTİ (mm²) Cable Section (mm²)	CIVATA DELİĞİ Bolt	BOYUTLAR Dimensions									KUTU ADEDİ Box Pcs.	KUTU AĞIRLIĞI Box Weight	BİRİM FİYATI TL Unit Price TL
			d1	d4	a	d2	b	c1	c2	L	L+c1			
AKP-DY/016-M08/SD	**16**	**M8**	**5,8**	**12,0**	**34,0**	**8,5**	**18,0**	**10,0**	**11,5**	**52,0**	**62,0**	**100**	**~ 1,3 kg.**	**0,75**
AKP-DY/016-M10		M10	5,8	12,0	34,0	10,5	18,0	10,0	11,5	52,0	62,0	100	~ 1,3 kg.	0,75
AKP-DY/025-M08/SD	**25**	**M8**	**6,8**	**12,0**	**40,0**	**8,5**	**18,0**	**10,0**	**11,5**	**60,0**	**70,0**	**80**	**~ 1,1 kg.**	**0,85**
AKP-DY/025-M10		M10	6,8	12,0	40,0	10,5	19,0	12,0	12,0	60,0	72,0	80	~ 1,1 kg.	0,85
AKP-DY/025-M12		M12	6,8	12,0	40,0	13,0	21,0	13,0	13,0	60,0	73,0	80	~ 1,1 kg.	0,85
AKP-DY/035-M08	**35**	M8	8,0	14,0	43,0	8,5	21,0	11,5	14,0	67,0	78,5	60	~ 1,3 kg.	1,10
AKP-DY/035-M10/SD		**M10**	**8,0**	**14,0**	**43,0**	**10,5**	**21,0**	**11,5**	**14,0**	**67,0**	**78,5**	**60**	**~ 1,3 kg.**	**1,10**
AKP-DY/035-M12		M12	8,0	14,0	43,0	13,0	21,0	11,5	14,0	67,0	78,5	60	~ 1,3 kg.	1,10
AKP-DY/050-M10/SD	**50**	**M10**	**9,8**	**16,0**	**46,0**	**10,5**	**25,0**	**14,0**	**15,0**	**72,0**	**86,0**	**40**	**~ 1,4 kg.**	**1,60**
AKP-DY/050-M12		M12	9,8	16,0	46,0	13,0	25,0	14,0	15,0	72,0	86,0	40	~ 1,4 kg.	1,60
AKP-DY/070-M10/SD	**70**	**M10**	**11,2**	**18,5**	**54,0**	**10,5**	**28,0**	**15,0**	**17,5**	**86,0**	**101,0**	**25**	**~ 1,4 kg.**	**2,25**
AKP-DY/070-M12		M12	11,2	18,5	54,0	13,0	28,0	15,0	17,5	86,0	101,0	25	~ 1,4 kg.	2,25
AKP-DY/095-M10	**95**	M10	13,2	22,0	59,0	10,5	32,0	15,5	17,5	90,0	105,5	15	~ 1,0 kg.	3,25
AKP-DY/095-M12/SD		**M12**	**13,2**	**22,0**	**59,0**	**13,0**	**32,0**	**15,5**	**17,5**	**90,0**	**105,5**	**15**	**~ 1,0 kg.**	**3,25**
AKP-DY/095-M16		M16	13,2	22,0	59,0	17,0	34,0	15,5	17,5	90,0	105,5	15	~ 1,0 kg.	3,25
AKP-DY/120-M12/SD	**120**	**M12**	**14,7**	**23,0**	**59,0**	**13,0**	**32,0**	**16,0**	**17,5**	**91,0**	**107,0**	**15**	**~ 0,9 kg.**	**3,75**
AKP-DY/120-M16		M16	14,7	23,0	59,0	17,0	34,0	16,0	17,5	91,0	107,0	15	~ 0,9 kg.	3,75
AKP-DY/150-M12/SD	**150**	**M12**	**16,3**	**25,0**	**62,0**	**13,0**	**35,0**	**17,5**	**20,0**	**103,0**	**120,5**	**12**	**~ 1,1 kg.**	**5,00**
AKP-DY/150-M16		M16	16,3	25,0	62,0	17,0	35,0	17,5	20,0	103,0	120,5	12	~ 1,1 kg.	5,00
AKP-DY/150-M20		M20	16,3	25,0	62,0	21,0	41,0	17,5	20,0	103,0	120,5	12	~ 1,1 kg.	5,00
AKP-DY/185-M12	**185**	M12	18,3	28,5	63,0	13,0	40,0	19,0	20,0	106,0	125,0	8	~ 1,1 kg.	6,50
AKP-DY/185-M16/SD		**M16**	**18,3**	**28,5**	**63,0**	**17,0**	**40,0**	**19,0**	**20,0**	**106,0**	**125,0**	**8**	**~ 1,1 kg.**	**6,50**
AKP-DY/185-M20		M20	18,3	28,5	63,0	21,0	40,0	19,0	20,0	106,0	125,0	8	~ 1,1 kg.	6,50
AKP-DY/240-M12	**240**	M12	21,0	32,0	72,0	13,0	45,0	23,0	24,0	116,0	139,0	8	~ 1,4 kg.	9,00
AKP-DY/240-M16/SD		**M16**	**21,0**	**32,0**	**72,0**	**17,0**	**45,0**	**23,0**	**24,0**	**116,0**	**139,0**	**8**	**~ 1,4 kg.**	**9,00**
AKP-DY/240-M20		M20	21,0	32,0	72,0	21,0	45,0	23,0	24,0	116,0	139,0	8	~ 1,4 kg.	9,00
AKP-DY/300-M16/SD	**300**	**M16**	**23,3**	**34,0**	**74,0**	**17,0**	**49,0**	**24,0**	**25,0**	**124,0**	**148,0**	**5**	**~ 1,2 kg.**	**12,50**
AKP-DY/300-M20		M20	23,3	34,0	74,0	21,0	49,0	24,0	25,0	124,0	148,0	5	~ 1,2 kg.	12,50
AKP-DY/400-M16/SD	**400**	**M16**	**26,0**	**38,5**	**105,0**	**17,0**	**58,0**	**30,0**	**32,0**	**166,0**	**196,0**	**10**	**~ 3,3 kg.**	**21,50**
AKP-DY/400-M20		M20	26,0	38,5	105,0	21,0	58,0	30,0	32,0	166,0	196,0	10	~ 3,3 kg.	21,50

AKP-DY Özellikleri

Hammadde	:	**Elektrolitik Alüminyum**
Material	:	Electrolytic Aluminium
Kaplama	:	**Doğal Parlak**
Coating	:	Natural Bright
Bağlantı	:	**Sıkma**
Joint	:	Clamp Coupling

DIN Normu 46329'a uygundur
Conformed to DIN 46329

Bu tabloda koyu yazı karakteri ile belirtilmiş olan kablo pabuçları standart üretimimizdir.
The cable lugs which are indicated in bolt font, are standart products of Simpa

AKP-DK ALÜMİNYUM KABLO PABUCU KALAY KAPLI OKSİT KORUMA YAĞLI DIN 46329
ALUMINIUM CABLE LUGS TIN PLATED WITH OXIDE PROTECTION OIL DIN 46329

*5846 sayılı yasa gereği fotoğrafların izinsiz yayınlanması ve kullanılması kesinlikle yasaktır.

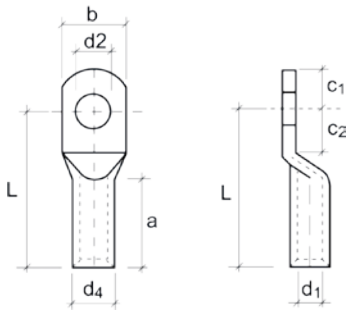

ÜRÜN KODU Order Code	KABLO KESİTİ (mm²) Cable Section (mm²)	CIVATA DELİĞİ Bolt	BOYUTLAR Dimensions d1	d4	a	d2	b	c1	c2	L	L+c1	KUTU ADEDİ Box Pcs.	KUTU AĞIRLIĞI Box Weight	BİRİM FİYATI TL Unit Price TL
AKP-DK/016-M08/SD	**16**	**M8**	**5,8**	**12,0**	**34,0**	**8,5**	**18,0**	**10,0**	**11,5**	**52,0**	**62,0**	**100**	**~ 1,3 kg.**	**0,80**
AKP-DK/016-M10		M10	5,8	12,0	34,0	10,5	18,0	10,0	11,5	52,0	62,0	100	~ 1,3 kg.	0,80
AKP-DK/025-M08/SD	**25**	**M8**	**6,8**	**12,0**	**40,0**	**8,5**	**18,0**	**10,0**	**11,5**	**60,0**	**70,0**	**80**	**~ 1,1 kg.**	**0,90**
AKP-DK/025-M10		M10	6,8	12,0	40,0	10,5	19,0	12,0	12,0	60,0	72,0	80	~ 1,1 kg.	0,90
AKP-DK/025-M12		M12	6,8	12,0	40,0	13,0	21,0	13,0	13,0	60,0	73,0	80	~ 1,1 kg.	0,90
AKP-DK/035-M08	**35**	M8	8,0	14,0	43,0	8,5	21,0	11,5	14,0	67,0	78,5	60	~ 1,3 kg.	1,20
AKP-DK/035-M10/SD		**M10**	**8,0**	**14,0**	**43,0**	**10,5**	**21,0**	**11,5**	**14,0**	**67,0**	**78,5**	**60**	**~ 1,3 kg.**	**1,20**
AKP-DK/035-M12		M12	8,0	14,0	43,0	13,0	21,0	11,5	14,0	67,0	78,5	60	~ 1,3 kg.	1,20
AKP-DK/050-M10/SD	**50**	**M10**	**9,8**	**16,0**	**46,0**	**10,5**	**25,0**	**14,0**	**15,0**	**72,0**	**86,0**	**40**	**~ 1,4 kg.**	**1,70**
AKP-DK/050-M12		M12	9,8	16,0	46,0	13,0	25,0	14,0	15,0	72,0	86,0	40	~ 1,4 kg.	1,70
AKP-DK/070-M10/SD	**70**	**M10**	**11,2**	**18,5**	**54,0**	**10,5**	**28,0**	**15,0**	**17,5**	**86,0**	**101,0**	**25**	**~ 1,4 kg.**	**2,50**
AKP-DK/070-M12		M12	11,2	18,5	54,0	13,0	28,0	15,0	17,5	86,0	101,0	25	~ 1,4 kg.	2,50
AKP-DK/095-M10	**95**	M10	13,2	22,0	59,0	10,5	32,0	15,5	17,5	90,0	105,5	15	~ 1,0 kg.	3,75
AKP-DK/095-M12/SD		**M12**	**13,2**	**22,0**	**59,0**	**13,0**	**32,0**	**15,5**	**17,5**	**90,0**	**105,5**	**15**	**~ 1,0 kg.**	**3,75**
AKP-DK/095-M16		M16	13,2	22,0	59,0	17,0	34,0	15,5	17,5	90,0	105,5	15	~ 1,0 kg.	3,75
AKP-DK/120-M12/SD	**120**	**M12**	**14,7**	**23,0**	**59,0**	**13,0**	**32,0**	**16,0**	**17,5**	**91,0**	**107,0**	**15**	**~ 0,9 kg.**	**4,25**
AKP-DK/120-M16		M16	14,7	23,0	59,0	17,0	34,0	16,0	17,5	91,0	107,0	15	~ 0,9 kg.	4,25
AKP-DK/150-M12/SD	**150**	**M12**	**16,3**	**25,0**	**62,0**	**13,0**	**35,0**	**17,5**	**20,0**	**103,0**	**120,5**	**12**	**~ 1,1 kg.**	**5,50**
AKP-DK/150-M16		M16	16,3	25,0	62,0	17,0	35,0	17,5	20,0	103,0	120,5	12	~ 1,1 kg.	5,50
AKP-DK/150-M20		M20	16,3	25,0	62,0	21,0	41,0	17,5	20,0	103,0	120,5	12	~ 1,1 kg.	5,50
AKP-DK/185-M12	**185**	M12	18,3	28,5	63,0	13,0	40,0	19,0	20,0	106,0	125,0	8	~ 1,1 kg.	7,40
AKP-DK/185-M16/SD		**M16**	**18,3**	**28,5**	**63,0**	**17,0**	**40,0**	**19,0**	**20,0**	**106,0**	**125,0**	**8**	**~ 1,1 kg.**	**7,40**
AKP-DK/185-M20		M20	18,3	28,5	63,0	21,0	40,0	19,0	20,0	106,0	125,0	8	~ 1,1 kg.	7,40
AKP-DK/240-M12	**240**	M12	21,0	32,0	72,0	13,0	45,0	23,0	24,0	116,0	139,0	8	~ 1,4 kg.	10,00
AKP-DK/240-M16/SD		**M16**	**21,0**	**32,0**	**72,0**	**17,0**	**45,0**	**23,0**	**24,0**	**116,0**	**139,0**	**8**	**~ 1,4 kg.**	**10,00**
AKP-DK/240-M20		M20	21,0	32,0	72,0	21,0	45,0	23,0	24,0	116,0	139,0	8	~ 1,4 kg.	10,00
AKP-DK/300-M16/SD	**300**	**M16**	**23,3**	**34,0**	**74,0**	**17,0**	**49,0**	**24,0**	**25,0**	**124,0**	**148,0**	**5**	**~ 1,2 kg.**	**14,00**
AKP-DK/300-M20		M20	23,3	34,0	74,0	21,0	49,0	24,0	25,0	124,0	148,0	5	~ 1,2 kg.	14,00
AKP-DK/400-M16/SD	**400**	**M16**	**26,0**	**38,5**	**105,0**	**17,0**	**58,0**	**30,0**	**32,0**	**166,0**	**196,0**	**10**	**~ 3,3 kg.**	**24,00**
AKP-DK/400-M20		M20	26,0	38,5	105,0	21,0	58,0	30,0	32,0	166,0	196,0	10	~ 3,3 kg.	24,00

AKP-DK Özellikleri

Hammadde	:	**Elektrolitik Alüminyum**
Material	:	Electrolytic Aluminium
Kaplama	:	**Kalay**
Coating	:	Tin Plated
Bağlantı	:	**Sıkma**
Joint	:	Clamp Coupling

DIN Normu 46329'a uygundur
Conformed to DIN 46329

Bu tabloda koyu yazı karakteri ile belirtilmiş olan kablo pabuçları standart üretimimizdir.
The cable lugs which are indicated in bolt font, are standart products of Simpa

AEM-D ALÜMİNYUM SIKMALI EK MUFLARI DIN 46267-2
ALUMINIUM BUTT CONNECTORS DIN 46267-2

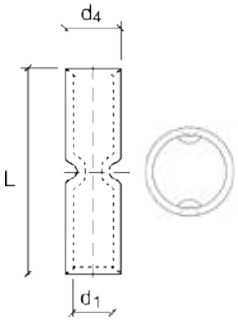

*5846 sayılı yasa gereği fotoğrafların izinsiz yayınlanması ve kullanılması kesinlikle yasaktır.

ÜRÜN KODU Order Code	KABLO KESİTİ (mm²) Cable Section (mm²)	BOYUTLAR Dimensions			KUTU ADEDİ Box Pcs.	KUTU AĞIRLIĞI Box Weight	BİRİM FİYATI TL Unit Price TL
		d1	d4	L			
AEM-D/016	16	5,8	12,0	60,0	110	~ 1,5 kg.	0,60
AEM-D/025	25	6,8	12,0	70,0	100	~ 1,5 kg.	0,80
AEM-D/035	35	8,0	14,0	85,0	60	~ 1,4 kg.	1,00
AEM-D/050	50	9,8	16,0	85,0	45	~ 1,3 kg.	1,50
AEM-D/070	70	11,2	18,5	105,0	20	~ 1,0 kg.	2,00
AEM-D/095	95	13,2	22,0	105,0	12	~ 0,9 kg.	3,00
AEM-D/120	120	14,7	23,0	105,0	12	~ 0,9 kg.	3,50
AEM-D/150	150	16,3	25,0	125,0	10	~ 1,0 kg.	4,50
AEM-D/185	185	18,3	28,5	125,0	8	~ 1,1 kg.	6,00
AEM-D/240	240	21,0	32,0	145,0	6	~ 1,1 kg.	8,00
AEM-D/300	300	23,3	34,0	145,0	6	~ 1,2 kg.	10,00
AEM-D/400	400	26,0	38,5	210,0	10	~ 3,5 kg.	20,00

AEM-D Özellikleri

Hammadde Material	:	**Elektrolitik Alüminyum** Electrolytic Aluminium
Kaplama Coating	:	**Doğal Parlak** Natural Bright
Bağlantı Joint	:	**Sıkma** Clamp Coupling

DIN Normu 46267-2'ye uygundur
Conformed to DIN 46267-2

BKP-D

BİMETAL KABLO PABUÇLARI (AL-CU)
BIMETALLIC CABLE LUGS (AL-CU)

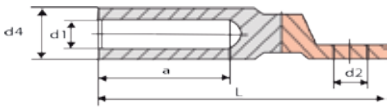

*5846 sayılı yasa gereği fotoğrafların izinsiz yayınlanması ve kullanılması kesinlikle yasaktır.

ÜRÜN KODU Order Code	KABLO KESİTİ (mm²) Cable Section (mm²)	CIVATA DELİĞİ Bolt	BOYUTLAR Dimensions					KUTU ADEDİ Box Pcs.	KUTU AĞIRLIĞI Box Weight	BİRİM FİYATI TL Unit Price TL
			d1	d4	a	d2	L			
BKP-D/016-M12/SD	16	M12	6,0	16,0	42,0	13,0	90,0	40	~ 2,1 kg.	7,00
BKP-D/025-M12/SD	25	M12	7,0	16,0	42,0	13,0	90,0	40	~ 2,0 kg.	7,00
BKP-D/035-M12/SD	35	M12	8,5	16,0	42,0	13,0	90,0	40	~ 2,0 kg.	7,50
BKP-D/050-M12/SD	50	M12	9,6	20,0	43,0	13,0	90,0	30	~ 2,0 kg.	9,00
BKP-D/070-M12/SD	70	M12	11,5	20,0	43,0	13,0	90,0	30	~ 2,0 kg.	9,00
BKP-D/095-M12/SD	95	M12	13,5	20,0	43,0	13,0	90,0	30	~ 1,8 kg.	10,00
BKP-D/120-M12/SD	120	M12	15,0	25,0	60,0	13,0	115,0	15	~ 1,9 kg.	14,00
BKP-D/150-M12/SD	150	M12	16,6	25,0	60,0	13,0	115,0	15	~ 1,8 kg.	16,00
BKP-D/185-M12/SD	185	M12	18,5	32,0	60,0	13,0	122,0	8	~ 1,8 kg.	24,00
BKP-D/240-M12/SD	240	M12	21,0	32,0	60,0	13,0	122,0	8	~ 1,7 kg.	26,00
BKP-D/300-M12/SD	300	M12	23,0	34,0	62,0	13,0	125,0	8	~ 1,8 kg.	40,00
BKP-D/400-M12/SD	400	M12	26,0	38,0	70,0	13,0	159,0	5	~ 1,9 kg.	45,00
BKP-D/500-M18/SD	500	M18	29,0	47,0	75,0	19,0	167,0	3	~ 1,8 kg.	95,00
BKP-D/625-M20/SD	625	M20	34,0	54,0	80,0	21,0	200,0	8	~ 6,8 kg.	135,00

BKP-D Özellikleri

Hammadde Material	: :	**Elektrolitik Bakır / Alüminyum** Electrolytic Copper / Aluminium
Kaplama Coating	: :	**Doğal Parlak** Natural Bright
Bağlantı Joint	: :	**Sıkma** Clamp Coupling

DIN Normu 48201 Alüminyum Kabloya Uygundur
Conformed to DIN 48201 Aluminium Cable

DIN Normu 46329 Boru Ölçüsüne Uygundur
Conformed to DIN 46329 Tube Dimesions

BEM-D

BİMETAL EK MUFLARI (AL-CU)
BIMETALLIC BUTT CONNECTORS (AL-CU)

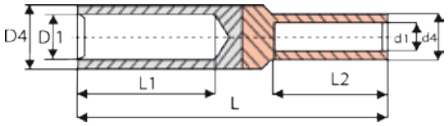

*5846 sayılı yasa gereği fotoğrafların izinsiz yayınlanması ve kullanılması kesinlikle yasaktır.

ÜRÜN KODU Order Code	KABLO KESİTİ (mm²) Cable Section (mm²)	BOYUTLAR Dimensions D1	D4	d1	d4	L1	L2	L	KUTU ADEDİ Box Pcs.	KUTU AĞIRLIĞI Box Weight	BİRİM FİYATI TL Unit Price TL
BEM-D/010-006	**10 / 6**	5,5	10,0	5,0	9,0	32,0	25,0	70,0	140	~ 2,6 kg.	5,00
BEM-D/016-010	**16 / 10**	5,5	10,0	5,5	9,0	35,0	28,0	75,0	140	~ 2,5 kg.	5,00
BEM-D/025-016	**25 / 16**	7,0	12,0	6,0	10,0	37,0	30,0	80,0	100	~ 2,6 kg.	5,50
BEM-D/035-025	**35 / 25**	8,5	14,0	7,0	11,0	44,0	32,0	90,0	70	~ 2,3 kg.	6,50
BEM-D/050-035	**50 / 35**	9,5	16,0	8,5	12,0	45,0	34,0	95,0	70	~ 2,6 kg.	7,00
BEM-D/070-050	**70 / 50**	12,0	18,0	9,5	14,0	46,0	35,0	100,0	35	~ 2,0 kg.	9,00
BEM-D/095-070	**95 / 70**	13,0	21,0	12,0	16,0	51,0	41,0	110,0	20	~ 1,4 kg.	12,00
BEM-D/120-095	**120 / 95**	15,0	23,0	13,0	18,0	52,0	43,0	112,0	15	~ 1,5 kg.	16,00
BEM-D/150-120	**150 / 120**	16,5	25,0	15,0	20,0	54,0	44,0	118,0	12	~ 2,0 kg.	20,00
BEM-D/185-150	**185 / 150**	18,5	27,0	16,0	22,0	58,0	47,0	125,0	12	~ 1,9 kg.	27,00
BEM-D/240-185	**240 / 185**	20,0	30,0	18,0	25,0	60,0	48,0	130,0	10	~ 1,8 kg.	28,00
BEM-D/300-240	**300 / 240**	23,0	34,0	21,0	27,0	65,0	55,0	145,0	6	~ 2,3 kg.	50,00
BEM-D/400-300	**400 / 300**	26,0	38,0	24,0	30,0	70,0	60,0	150,0	6	~ 1,9 kg.	73,00
BEM-D/500-400	**500 / 400**	29,0	42,0	26,0	34,0	75,0	65,0	160,0	4	~ 1,8 kg.	95,00
BEM-D/625-500	**625 / 500**	34,0	54,0	30,0	38,0	80,0	70,0	170,0	1	~ 0,7 kg.	135,00

BEM-D Özellikleri

Hammadde	:	**Elektrolitik Bakır / Alüminyum**
Material	:	Electrolytic Copper / Aluminium
Kaplama	:	**Doğal Parlak**
Coating	:	Natural Bright
Bağlantı	:	**Sıkma**
Joint	:	Clamp Coupling

1 TBE MONOFAZE ERKEK İZOLELİ BARALAR
1 PHASE INSULATED COMB BUSBARS PIN TYPE

*5846 sayılı yasa gereği fotoğrafların izinsiz yayınlanması ve kullanılması kesinlikle yasaktır.

ÜRÜN KODU Order Code	MODÜL Module	BAKIR KALINLIĞI Copper Thickness	MAKSİMUM AKIM DEĞERİ Maximum Current Value	ÇALIŞMA GERİLİMİ Operating Voltage	KUTU ADEDİ Box Pcs.	KUTU AĞIRLIĞI Box Weight	BİRİM FİYATI TL Unit Price TL
1TBE-12/1,5	12 OTOMAT İÇİN - 12 Modules	1,5 mm.	100 A	230 - 400 V	60	~ 3,0 kg.	5,30
1TBE-18/1,5	18 OTOMAT İÇİN - 18 Modules	1,5 mm.	100 A	230 - 400 V	30	~ 2,3 kg.	8,00
1TBE-24/1,5	24 OTOMAT İÇİN - 24 Modules	1,5 mm.	100 A	230 - 400 V	30	~ 3,1 kg.	10,50
1TBE-30/1,5	30 OTOMAT İÇİN - 30 Modules	1,5 mm.	100 A	230 - 400 V	30	~ 3,7 kg.	13,00
1TBE-MT/1,5	56 OTOMAT İÇİN - 56 Modules	1,5 mm.	100 A	230 - 400 V	30	~ 7,1 kg.	24,50

2 TBE İKİ FAZLI ERKEK İZOLELİ BARALAR
2 PHASE INSULATED COMB BUSBARS PIN TYPE

*5846 sayılı yasa gereği fotoğrafların izinsiz yayınlanması ve kullanılması kesinlikle yasaktır.

ÜRÜN KODU Order Code	MODÜL Module	BAKIR KALINLIĞI Copper Thickness	MAKSİMUM AKIM DEĞERİ Maximum Current Value	ÇALIŞMA GERİLİMİ Operating Voltage	KUTU ADEDİ Box Pcs.	KUTU AĞIRLIĞI Box Weight	BİRİM FİYATI TL/Ad. Unit Price TL
2TBE-06/1,0	6 GRUP İÇİN - 6 Modules	1,0 mm.	80 A	230 - 400 V	24	~ 2,2 kg.	9,00
2TBE-09/1,0	9 GRUP İÇİN - 9 Modules	1,0 mm.	80 A	230 - 400 V	12	~ 1,7 kg.	13,00
2TBE-12/1,0	12 GRUP İÇİN - 12 Modules	1,0 mm.	80 A	230 - 400 V	12	~ 2,2 kg.	17,00
2TBE-15/1,0	15 GRUP İÇİN - 15 Modules	1,0 mm.	80 A	230 - 400 V	12	~ 2,7 kg.	21,00
2TBE-MT/1,0	28 GRUP İÇİN - 28 Modules	1,0 mm.	80 A	230 - 400 V	10	~ 4,3 kg.	40,00
2TBE-06/1,5	6 GRUP İÇİN - 6 Modules	1,5 mm.	100 A	230 - 400 V	24	~ 1,4 kg.	11,00
2TBE-09/1,5	9 GRUP İÇİN - 9 Modules	1,5 mm.	100 A	230 - 400 V	12	~ 2,1 kg.	17,00
2TBE-12/1,5	12 GRUP İÇİN - 12 Modules	1,5 mm.	100 A	230 - 400 V	12	~ 2,7 kg.	22,00
2TBE-15/1,5	15 GRUP İÇİN - 15 Modules	1,5 mm.	100 A	230 - 400 V	12	~ 3,4 kg.	28,00
2TBE-MT/1,5	28 GRUP İÇİN - 28 Modules	1,5 mm.	100 A	230 - 400 V	10	~5,5 kg.	52,00

3 TBE

TRİFAZE ERKEK İZOLELİ BARALAR
3 PHASE INSULATED COMB BUSBARS PIN TYPE

*5846 sayılı yasa gereği fotoğrafların izinsiz yayınlanması ve kullanılması kesinlikle yasaktır.

ÜRÜN KODU Order Code	MODÜL Module	BAKIR KALINLIĞI Copper Thickness	MAKSİMUM AKIM DEĞERİ Maximum Current Value	ÇALIŞMA GERİLİMİ Operating Voltage	KUTU ADEDİ Box Pcs.	KUTU AĞIRLIĞI Box Weight	BİRİM FİYATI TL Unit Price TL
3TBE-04/1,0	4 GRUP İÇİN - 4 Modules	1,0 mm.	80 A	230 - 400 V	24	~ 2,5 kg.	11,00
3TBE-06/1,0	6 GRUP İÇİN - 6 Modules	1,0 mm.	80 A	230 - 400 V	12	~ 2,0 kg.	16,50
3TBE-08/1,0	8 GRUP İÇİN - 8 Modules	1,0 mm.	80 A	230 - 400 V	12	~ 2,6 kg.	22,00
3TBE-10/1,0	10 GRUP İÇİN - 10 Modules	1,0 mm.	80 A	230 - 400 V	12	~ 3,2 kg.	27,50
3TBE-MT/1,0	19 GRUP İÇİN - 19 Modules	1,0 mm.	80 A	230 - 400 V	10	~ 5,3 kg.	52,00
3TBE-04/1,5	4 GRUP İÇİN - 4 Modules	1,5 mm.	100 A	230 - 400 V	24	~ 3,2 kg.	15,60
3TBE-06/1,5	6 GRUP İÇİN - 6 Modules	1,5 mm.	100 A	230 - 400 V	12	~ 2,6 kg.	23,40
3TBE-08/1,5	8 GRUP İÇİN - 8 Modules	1,5 mm.	100 A	230 - 400 V	12	~ 3,3 kg.	31,20
3TBE-10/1,5	10 GRUP İÇİN - 10 Modules	1,5 mm.	100 A	230 - 400 V	12	~ 4,2 kg.	39,00
3TBE-MT/1,5	19 GRUP İÇİN - 19 Modules	1,5 mm.	100 A	230 - 400 V	10	~ 6,8 kg.	74,00

4 TBE

ÜÇ FAZ + NÖTR ERKEK İZOLELİ BARALAR
THREE PHASE + NEUTRAL INSULATED COMB BUSBARS PIN TYPE

*5846 sayılı yasa gereği fotoğrafların izinsiz yayınlanması ve kullanılması kesinlikle yasaktır.

ÜRÜN KODU Order Code	MODÜL Module	BAKIR KALINLIĞI Copper Thickness	MAKSİMUM AKIM DEĞERİ Maximum Current Value	ÇALIŞMA GERİLİMİ Operating Voltage	KUTU ADEDİ Box Pcs.	KUTU AĞIRLIĞI Box Weight	BİRİM FİYATI TL/Ad. Unit Price TL
4TBE-04/1,5	4 GRUP İÇİN - 4 Modules	1,5 mm.	100 A	230 - 400 V	8	~ 2,0 kg.	30,00
4TBE-05/1,5	5 GRUP İÇİN - 5 Modules	1,5 mm.	100 A	230 - 400 V	8	~ 2,8 kg.	37,50
4TBE-06/1,5	6 GRUP İÇİN - 6 Modules	1,5 mm.	100 A	230 - 400 V	8	~ 3,0 kg.	45,00
4TBE-07/1,5	7 GRUP İÇİN - 7 Modules	1,5 mm.	100 A	230 - 400 V	8	~ 3,5 kg.	52,50
4TBE-08/1,5	8 GRUP İÇİN - 8 Modules	1,5 mm.	100 A	230 - 400 V	8	~ 3,9 kg.	60,00
4TBE-MT/1,5	14 GRUP İÇİN - 14 Modules	1,5 mm.	100 A	230 - 400 V	8	~ 6,8 kg.	105,00

3 TBD

TRİFAZE DİŞİ İZOLELİ BARALAR
3 PHASE INSULATED COMB BUSBARS FORK TYPE

*5846 sayılı yasa gereği fotoğrafların izinsiz yayınlanması ve kullanılması kesinlikle yasaktır.

ÜRÜN KODU Order Code	MODÜL Module	BAKIR KALINLIĞI Copper Thickness	MAKSİMUM AKIM DEĞERİ Maximum Current Value	ÇALIŞMA GERİLİMİ Operating Voltage	KUTU ADEDİ Box Pcs.	KUTU AĞIRLIĞI Box Weight	BİRİM FİYATI TL Unit Price TL
3TBD-04/1,0	4 GRUP İÇİN - 4 Modules	1,0 mm.	80 A	230 - 400 V	24	~ 2,3 kg.	13,00
3TBD-06/1,0	6 GRUP İÇİN - 6 Modules	1,0 mm.	80 A	230 - 400 V	12	~ 2,1 kg.	18,50
3TBD-08/1,0	8 GRUP İÇİN - 8 Modules	1,0 mm.	80 A	230 - 400 V	12	~ 2,5 kg.	24,50
3TBD-10/1,0	10 GRUP İÇİN - 10 Modules	1,0 mm.	80 A	230 - 400 V	12	~ 3,4 kg.	30,00
3TBD-04/1,5	4 GRUP İÇİN - 4 Modules	1,5 mm.	100 A	230 - 400 V	24	~ 3,6 kg.	17,50
3TBD-06/1,5	6 GRUP İÇİN - 6 Modules	1,5 mm.	100 A	230 - 400 V	12	~ 2,7 kg.	26,50
3TBD-08/1,5	8 GRUP İÇİN - 8 Modules	1,5 mm.	100 A	230 - 400 V	12	~ 3,6 kg.	35,00
3TBD-10/1,5	10 GRUP İÇİN - 10 Modules	1,5 mm.	100 A	230 - 400 V	12	~ 4,5 kg.	43,00

BARA TAPALARI

PROTECTIVE BUSBAR CAPS

ÜRÜN KODU Order Code	PAKET ADEDİ Package Pcs.	PAKET AĞIRLIĞI Package Weight	BİRİM FİYATI TL Unit Price TL
MONOFAZE BARA TAPASI MonoPhase Protective Busbar Caps	150	~ 0,1 kg.	10,50
İKİ ve ÜÇ FAZ BARA TAPASI 2 & 3 Phase Protective Busbar Caps	125	~ 0,1 kg.	12,50
TRİFAZE + NÖTR BARA TAPASI 3+ N Phase Protective Busbar Caps	75	~0,1 kg.	10,50

1BOB-E

MONOFAZE ERKEK İZOLESİZ BAKIR BARALAR
1 PHASE NON-INSULATED COMB BUSBARS PIN TYPE

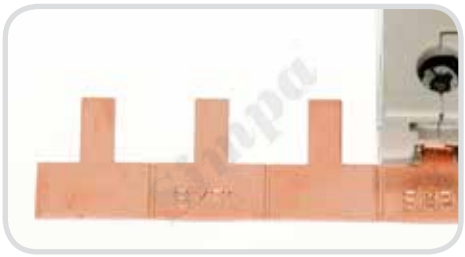

*5846 sayılı yasa gereği fotoğrafların izinsiz yayınlanması ve kullanılması kesinlikle yasaktır.

ÜRÜN KODU Order Code	KULLANIM YERİ Be Used	BAKIR KALINLIĞI Copper Thickness	KUTU ADEDİ Box Pcs.	KUTU AĞIRLIĞI Box Weight	BİRİM FİYATI TL Unit Price TL
1BOB-E/1,5	Monofaze N Otomat	1,5 mm.	20	~ 3,3 kg.	16,00
1BOB-E/2,0	Monofaze N Otomat	2,0 mm.	20		20,00

1BOB-D

MONOFAZE ERKEK İZOLESİZ BAKIR BARALAR
1 PHASE NON-INSULATED COMB BUSBARS PIN TYPE

*5846 sayılı yasa gereği fotoğrafların izinsiz yayınlanması ve kullanılması kesinlikle yasaktır.

ÜRÜN KODU Order Code	KULLANIM YERİ Be Used	BAKIR KALINLIĞI Copper Thickness	KUTU ADEDİ Box Pcs.	KUTU AĞIRLIĞI Box Weight	BİRİM FİYATI TL Unit Price TL
1BOB-D/1,5	Monofaze W Otomat	1,5 mm.	20		
1BOB-D/2,0	Monofaze W Otomat	2,0 mm.	20	~ 4,6 kg.	17,00

KUB

(NÖTR) BAKIR TOPRAKLAMA BARALARI
EARTHING BARS

*5846 sayılı yasa gereği fotoğrafların izinsiz yayınlanması ve kullanılması kesinlikle yasaktır.

ÜRÜN KODU Order Code	DAĞITIM SAYISI Distribution	BAKIR KALINLIĞI Copper Thickness	KUTU ADEDİ Box Pcs.	KUTU AĞIRLIĞI Box Weight	BİRİM FİYATI TL Unit Price TL
KUB-1,5/31	31 VİDA	1,5X15,0	10	~ 3,3 kg.	21,50
KUB-1,5/61	61 VİDA	1,5X15,0	10	~ 4,6 kg.	24,90
KUB-2,0/31	31 VİDA	2,0X15,0	10	~ 3,9 kg.	27,50
KUB-2,0/61	61 VİDA	2,0X15,0	10	~ 5,2 kg.	31,00
KUB-3,0/31	31 VİDA	3,0X15,0	10	~ 5,0 kg.	39,00
KUB-3,0/61	61 VİDA	3,0X15,0	10	~ 6,3 kg.	43,00

RoHS 2002/95/EC

SP-IKY İZOLELİ KABLO YÜKSÜKLERİ
INSULATED CABLE END-SLEEVES

*5846 sayılı yasa gereği fotoğrafların izinsiz yayınlanması ve kullanılması kesinlikle yasaktır.

ÜRÜN KODU Order Code	KABLO KESİTİ (mm²) Cable Section (mm²)	BOYUTLAR Dimensions a	c	L	W	D	C	RENK Color	KUTU ADEDİ Box Pcs.	KUTU AĞIRLIĞI Box Weight	BİRİM FİYATI TL Unit Price TL	KUTU FİYATI TL Box Price TL
SP-IKY/0,50-8	0,5	6,0	8,0	14,0	2,6	1,3	1,0	Turuncu	1.000	~ 0,2 kg.	0,022	22,00
SP-IKY/0,75-8	0,75	6,0	8,0	14,0	2,8	1,5	1,2	Beyaz	1.000	~ 0,3 kg.	0,022	22,00
SP-IKY/1,0-8	1	6,0	8,0	14,0	3	1,7	1,4	Sarı	500	~ 0,1 kg.	0,022	11,00
SP-IKY/1,5-8	1,5	6,0	8,0	14,0	3,5	2,0	1,7	Kırmızı	500	~ 0,1 kg.	0,024	12,00
SP-IKY/2,5-8	2,5	7,0	8,0	15,0	4	2,6	2,3	Mavi	500	~ 0,3 kg.	0,028	14,00
SP-IKY/4-10	4	6,0	9,0	16,0	4,4	3,2	2,8	Gri	250	~ 0,1 kg.	0,050	12,50
SP-IKY/6-12	6	8,0	12,0	20,0	6,3	3,9	3,5	Siyah	200	~ 0,2 kg.	0,065	13,00
SP-IKY/10-12	10	9,0	12,0	21,0	7,6	4,9	4,5	Fildişi	100	~ 0,1 kg.	0,088	8,80
SP-IKY/16-12	16	10,0	12,0	22,0	8,8	6,2	5,8	Yeşil	50	~ 0,1 kg.	0,120	6,00
SP-IKY/25-16	25	13,0	16,0	29,0	11,2	7,9	7,5	Kahve	50	~ 0,1 kg.	0,200	10,00
SP-IKY/35-16	35	14,0	16,0	30,0	12,7	8,7	8,3	Bej	20	~ 0,1 kg.	0,300	6,00
SP-IKY/50-20	50	16,0	20,0	36,0	15,3	10,9	10,3	Z. Yeşili	20	~ 0,1 kg.	0,500	10,00

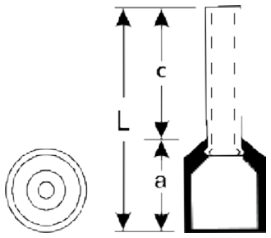

IKY Özellikleri

Hammadde Material	:	Bakır Copper
Kaplama Coating	:	Kalay Tin Plated
İzolasyon Insulation	:	Naylon Nylon
Norm Conformed to	:	DIN 46228 DIN 46228

Yüksük kodlarımızda, birinci rakamlar kesiti, ikinci rakamlar yüksük boylarını göstermektedir.

For the insulated connectors, the first part of the product code indicates the diameter and the second part of the product code indicates length of the product.

Alman Renk Normuna Uygundur.

Conformed to German Color Standard.

SP-KY İZOLESİZ KABLO YÜKSÜKLERİ
NON-INSULATED SLEEVES

*5846 sayılı yasa gereği fotoğrafların izinsiz yayınlanması ve kullanılması kesinlikle yasaktır.

ÜRÜN KODU Order Code	KABLO KESİTİ (mm²) Cable Section (mm²)	BOYUTLAR Dimensions L	W	D	C	KUTU ADEDİ Box Pcs.	KUTU AĞIRLIĞI Box Weight	ADET FİYATI TL Unit Price TL	KUTU FİYATI TL Box Price TL
SP-KY/0,50-10	0,5	10	1,7	1,3	1,0	1.000	~ 0,1 kg.	0,018	18,00
SP-KY/0,75-10	0,75	10	1,9	1,5	1,2	1.000	~ 0,1 kg.	0,018	18,00
SP-KY/1,0-10	1	10	2,2	1,8	1,4	1.000	~ 0,1 kg.	0,018	18,00
SP-KY/1,5-10	1,5	10	2,5	2,0	1,7	1.000	~ 0,1 kg.	0,022	22,00
SP-KY/2,5-12	2,5	12	3,3	2,6	2,2	1.000	~ 0,1 kg.	0,030	30,00
SP-KY/4-12	4	12	3,9	3,2	2,8	500	~ 0,1 kg.	0,042	21,00
SP-KY/6-12	6	12	4,8	3,9	3,5	250	~ 0,1 kg.	0,050	12,50
SP-KY/10-12	10	12	5,8	4,9	4,5	250	~ 0,1 kg.	0,070	17,50
SP-KY/16-12	16	12	7,2	6,2	5,8	100	~ 0,1 kg.	0,095	9,50
SP-KY/25-15	25	16	9,1	7,9	7,5	100	~ 0,1 kg.	0,180	18,00
SP-KY/35-15	35	16	10,2	8,7	8,3	50	~ 0,1 kg.	0,195	9,75
SP-KY/50-20	50	20	12,4	10,9	10,3	40	~ 0,1 kg.	0,500	20,00

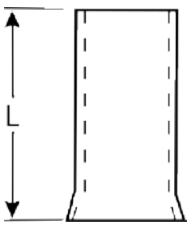

KY Özellikleri

Hammadde Material	:	Bakır Copper
Kaplama Coating	:	Kalay Tin Plated

Yüksük kodlarımızda, birinci rakamlar kesiti, ikinci rakamlar yüksük boylarını göstermektedir.

For the connectors, the first part of the product code indicates the diameter and the second part of the product code indicates length of the product.

RoHS 2002/95/EC

SP-IKY/2

İZOLELİ ÇİFT GİRİŞLİ KABLO YÜKSÜKLERİ
INSULATED TWIN CABLE END-SLEEVES

*5846 sayılı yasa gereği fotoğrafların izinsiz yayınlanması ve kullanılması kesinlikle yasaktır.

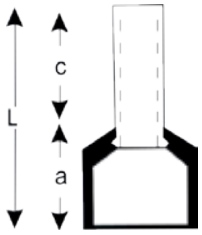

ÜRÜN KODU Order Code	KABLO KESİTİ (mm²) Cable Section (mm²)	BOYUTLAR Dimensions a	c	L	W	D	C	RENK Color	KUTU ADEDİ Box Pcs.	KUTU AĞIRLIĞI Box Weight	ADET FİYATI TL Unit Price TL	KUTU FİYATI TL Box Price TL
SP-IKY/2X0,5-8	**2X0,5**	7,0	8,0	15,0	5,0	1,8	1,5	Beyaz	500	~ 0,1 kg.	0,045	22,50
SP-IKY/2X0,75-8	**2X0,75**	7,0	8,0	15,0	5,5	2,1	1,8	Mavi	500	~ 0,1 kg.	0,045	22,50
SP-IKY/2X1,0-8	**2X1**	7,0	8,0	15,0	5,5	2,3	2,0	Kırmızı	500	~ 0,1 kg.	0,047	23,50
SP-IKY/2X1,5-8	**2X1,5**	7,0	8,0	15,0	6,4	2,6	2,3	Siyah	250	~ 0,1 kg.	0,068	17,00
SP-IKY/2X2,5-10	**2X2,5**	9,0	10,0	19,0	8,0	3,3	2,9	Gri	200	~ 0,1 kg.	0,085	17,00
SP-IKY/2X4-12	**2X4**	11,0	12,0	23,0	8,8	4,2	3,8	Turuncu	100	~ 0,1 kg.	0,115	11,50
SP-IKY/2X6-14	**2X6**	12,0	14,0	26,0	9,5	5,3	4,9	Yeşil	75	~ 0,1 kg.	0,160	12,00
SP-IKY/2X10-14	**2X10**	13,0	14,0	27,0	12,6	6,9	6,5	Kahverengi	50	~ 0,1 kg.	0,240	12,00
SP-IKY/2X16-14	**2X16**	17,0	14,0	31,0	19,0	8,7	8,3	Bej	25	~ 0,1 kg.	0,280	7,00

IKY/2 Özellikleri

Hammadde	:	**Bakır**
Material	:	Copper
Kaplama	:	**Kalay**
Coating	:	Tin Plated
İzolasyon	:	**Naylon**
Insulation	:	Nylon

Yüksük kodlarımızda, birinci rakamlar kesiti, ikinci rakamlar yüksük boylarını göstermektedir.

For the insulated connectors, the first part of the product code indicates the diameter and the second part of the product code indicates length of the product.

RoHS 2002/95/EC

SP-YK İZOLELİ YUVARLAK TİP KABLO PABUÇLARI
INSULATED RING TYPE TERMINALS

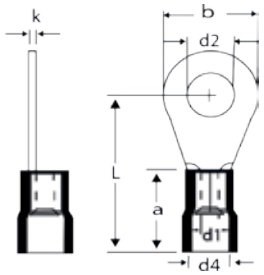

*5846 sayılı yasa gereği fotoğrafların izinsiz yayınlanması ve kullanılması kesinlikle yasaktır.

ÜRÜN KODU Order Code	KABLO KESİTİ (mm²) Cable Section (mm²)	CIVATA DELİĞİ Bolt	BOYUTLAR Dimensions d1	d4	a	d2	b	L	K	RENK Color	KUTU ADEDİ Box Pcs.	KUTU AĞIRLIĞI Box Weight	ADET FİYATI TL Unit Price TL	KUTU FİYATI TL Box Price TL
SP-YK/301	0,5-1,5	M3	1,6	4,3	10,0	3,2	5,7	17,6	0,7	Kırmızı	200	~ 0,2 kg.	0,070	14,00
SP-YK/401	0,5-1,5	M4	1,6	4,3	10,0	4,3	8,0	20,8	0,7	Kırmızı	200	~ 0,2 kg.	0,075	15,00
SP-YK/501	0,5-1,5	M5	1,6	4,3	10,0	5,3	9,8	23	0,7	Kırmızı	200	~ 0,2 kg.	0,090	18,00
SP-YK/601	0,5-1,5	M6	1,6	4,3	10,0	6,4	11,6	26,8	0,7	Kırmızı	200	~ 0,2 kg.	0,105	21,00
SP-YK/801	0,5-1,5	M8	2,3	4,3	10,0	8,4	11,6	26,8	0,7	Kırmızı	200	~ 0,2 kg.	0,135	27,00
SP-YK/302	1,5-2,5	M3	2,3	4,9	10,0	3,2	6,6	17,5	0,8	Mavi	200	~ 0,2 kg.	0,080	16,00
SP-YK/402	1,5-2,5	M4	2,3	4,9	10,0	4,3	8,5	22,0	0,8	Mavi	200	~ 0,2 kg.	0,090	18,00
SP-YK/502	1,5-2,5	M5	2,3	4,9	10,0	5,3	9,5	22,0	0,8	Mavi	200	~ 0,2 kg.	0,100	20,00
SP-YK/602	1,5-2,5	M6	2,3	4,9	10,0	6,4	12,0	27,0	0,8	Mavi	100	~ 0,2 kg.	0,115	11,50
SP-YK/802	1,5-2,5	M8	2,3	4,9	10,0	8,4	12,0	27,0	0,8	Mavi	100	~ 0,1 kg.	0,140	14,00
SP-YK/1002	1,5-2,5	M10	2,3	4,9	10,0	10,5	13,6	30,7	0,8	Mavi	100	~ 0,2 kg.	0,190	19,00
SP-YK/1202	1,5-2,5	M12	2,3	4,9	10,0	13,0	19,2	36,2	0,8	Mavi	100	~ 0,2 kg.	0,200	20,00
SP-YK/406	4-6	M4	3,6	6,7	13,0	4,3	9,5	25,8	1,0	Sarı	100	~ 0,2 kg.	0,170	17,00
SP-YK/506	4-6	M5	3,6	6,7	13,0	5,3	9,5	25,8	1,0	Sarı	100	~ 0,2 kg.	0,160	16,00
SP-YK/606	4-6	M6	3,6	6,7	13,0	6,4	12,0	29,4	1,0	Sarı	100	~ 0,2 kg.	0,220	22,00
SP-YK/806	4-6	M8	3,6	6,7	13,0	8,4	15,0	34,0	1,0	Sarı	75	~ 0,2 kg.	0,240	18,00
SP-YK/1006	4-6	M10	3,6	6,7	13,0	10,5	15,0	34,0	1,0	Sarı	75	~ 0,2 kg.	0,260	19,50
SP-YK/1206	4-6	M12	3,6	6,7	13,0	13,0	19,2	38,4	1,0	Sarı	50	~ 0,2 kg.	0,300	15,00

SP-YK Özellikleri

Hammadde Material	:	**Bakır** Copper
Kaplama Coating	:	**Kalay** Tin Plated
İzolasyon Insulation	:	**Naylon** Nylon

RoHS 2002/95/EC

SP-CK İZOLELİ ÇATAL TİP KABLO PABUÇLARI
INSULATED FORK TYPE TERMINALS

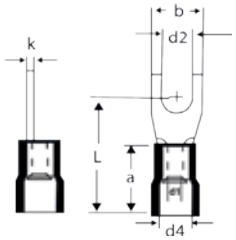

*5846 sayılı yasa gereği fotoğrafların izinsiz yayınlanması ve kullanılması kesinlikle yasaktır.

ÜRÜN KODU Order Code	KABLO KESİTİ (mm²) Cable Section (mm²)	CIVATA DELİĞİ Bolt	BOYUTLAR Dimensions d1	d4	a	d2	b	L	K	RENK Color	KUTU ADEDİ Box Pcs.	KUTU AĞIRLIĞI Box Weight	ADET FİYATI TL Unit Price TL	KUTU FİYATI TL Box Price TL
SP-CK/301	0,5-1,5	M3	1,6	4,3	10,0	3,2	5,7	21,2	0,7	Kırmızı	200	~ 0,2 kg.	0,068	13,60
SP-CK/401	0,5-1,5	M4	1,6	4,3	10,0	4,3	8,1	21,2	0,7	Kırmızı	200	~ 0,2 kg.	0,080	16,00
SP-CK/501	0,5-1,5	M5	1,6	4,3	10,0	5,3	9,5	21,2	0,7	Kırmızı	200	~ 0,2 kg.	0,090	18,00
SP-CK/601	0,5-1,5	M6	1,6	4,3	10,0	6,4	12	27,2	0,7	Kırmızı	200	~ 0,2 kg.	0,125	25,00
SP-CK/302	1,5-2,5	M3	2,3	4,9	10,0	3,2	5,7	21,2	0,8	Mavi	200	~ 0,2 kg.	0,085	17,00
SP-CK/402	1,5-2,5	M4	2,3	4,9	10,0	4,3	8,1	21,2	0,8	Mavi	200	~ 0,2 kg.	0,085	17,00
SP-CK/502	1,5-2,5	M5	2,3	4,9	10,0	5,3	9,5	21,2	0,8	Mavi	200	~ 0,2 kg.	0,100	20,00
SP-CK/602	1,5-2,5	M6	2,3	4,9	10,0	6,4	12	27,2	0,8	Mavi	100	~ 0,2 kg.	0,130	13,00
SP-CK/406	4-6	M4	3,6	6,7	13,0	4,3	8,3	26,0	1,0	Sarı	100	~ 0,2 kg.	0,145	14,50
SP-CK/506	4-6	M5	3,6	6,7	13,0	5,3	9,0	26,0	1,0	Sarı	100	~ 0,2 kg.	0,150	15,00
SP-CK/606	4-6	M6	3,6	6,7	13,0	6,4	12,0	32,0	1,0	Sarı	100	~ 0,2 kg.	0,220	22,00
SP-CK/806	4-6	M8	3,6	6,7	13,0	8,4	14,0	32,0	1,0	Sarı	75	~ 0,2 kg.	0,250	18,75

SP-CK Özellikleri

Hammadde Material	:	**Bakır** Copper
Kaplama Coating	:	**Kalay** Tin Plated
İzolasyon Insulation	:	**Naylon** Nylon

SP-IK İZOLELİ İĞNE TİP KABLO UÇLARI
INSULATED PIN CONNECTORS

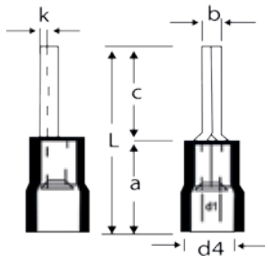

*5846 sayılı yasa gereği fotoğrafların izinsiz yayınlanması ve kullanılması kesinlikle yasaktır.

ÜRÜN KODU Order Code	KABLO KESİTİ (mm²) Cable Section (mm²)	BOYUTLAR Dimensions d1	d4	a	c	b	L	K	RENK Color	KUTU ADEDİ Box Pcs.	KUTU AĞIRLIĞI Box Weight	ADET FİYATI TL Unit Price TL	KUTU FİYATI TL Box Price TL
SP-IK/0,5-1,5	**0,5-1,5**	1,7	4,3	10,0	10,0	1,9	20,0	0,75	Kırmızı	200	~ 0,2 kg.	0,080	16,00
SP-IK/1,5-2,5	**1,5-2,5**	2,3	4,9	10,0	12,0	1,9	22,0	0,8	Mavi	200	~ 0,2 kg.	0,085	17,00
SP-IK/4-6	**4-6**	3,4	6,7	13,0	12,5	2,8	25,5	1,0	Sarı	100	~ 0,2 kg.	0,185	18,50

SP-IK Özellikleri

Hammadde Material	:	**Bakır** Copper
Kaplama Coating	:	**Kalay** Tin Plated
İzolasyon Insulation	:	**PVC** PVC

SP-FD İZOLELİ DİŞİ FASTON TİP KABLO UÇLARI
INSULATED RECEPTACLES

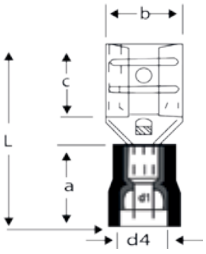

*5846 sayılı yasa gereği fotoğrafların izinsiz yayınlanması ve kullanılması kesinlikle yasaktır.

ÜRÜN KODU Order Code	KABLO KESİTİ (mm²) Cable Section (mm²)	SOKET GENİŞLİĞİ Socket Size	BOYUTLAR Dimensions d1	d4	a	c	b	L	RENK Color	KUTU ADEDİ Box Pcs.	KUTU AĞIRLIĞI Box Weight	ADET FİYATI TL Unit Price TL	KUTU FİYATI TL Box Price TL
SP-FD/1288-5	**0,5-1,5**	0,5X2,8	1,7	3,8	10,0	6,6	3,8	19,0	Kırmızı	200	~ 0,1 kg.	0,140	28,00
SP-FD/1288	**0,5-1,5**	0,8X2,8	1,7	3,8	10,0	6,6	3,8	19,0	Kırmızı	200	~ 0,1 kg.	0,140	28,00
SP-FD/1488-5	**0,5-1,5**	0,5X4,75	1,7	3,8	10,0	6,4	5,6	19,0	Kırmızı	200	~ 0,1 kg.	0,150	30,00
SP-FD/1488	**0,5-1,5**	0,8X4,75	1,7	3,8	10,0	6,4	5,6	19,0	Kırmızı	200	~ 0,1 kg.	0,150	30,00
SP-FD/1638	**0,5-1,5**	0,8X6,35	1,7	3,8	10,0	7,5	7,4	21,0	Kırmızı	100	~ 0,1 kg.	0,190	19,00
SP-FD/2288	**1,5-2,5**	0,8X2,8	2,3	4,3	10,0	6,5	3,8	19,0	Mavi	200	~ 0,1 kg.	0,150	30,00
SP-FD/2488	**1,5-2,5**	0,8X4,75	2,3	4,3	10,0	6,4	5,6	19,0	Mavi	200	~ 0,1 kg.	0,150	30,00
SP-FD/2638	**1,5-2,5**	0,8X6,35	2,3	4,3	10,0	7,5	7,4	21,0	Mavi	100	~ 0,1 kg.	0,200	20,00
SP-FD/2778	**1,5-2,5**	0,8X8	2,3	4,3	10,0	10	9,0	23,0	Mavi	100	~ 0,1 kg.	0,240	24,00
SP-FD/5638	**4-6**	0,8X6,35	3,4	5,7	13,0	7,5	7,4	25,0	Sarı	100	~ 0,1 kg.	0,280	28,00
SP-FD/5956	**4-6**	1,2X9,4	3,4	5,7	13,0	12	10,9	29,6	Sarı	50	~ 0,1 kg.	0,420	21,00

SP-FD Özellikleri

Hammadde Material	:	**Pirinç** Brass
Kaplama Coating	:	**Kalay** Tin Plated
İzolasyon Insulation	:	**PVC** PVC

SP-FE İZOLELİ ERKEK FASTON TİP KABLO UÇLARI
INSULATED TABS

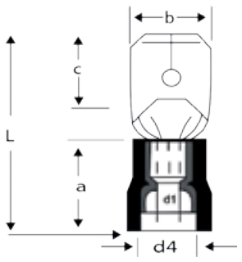

*5846 sayılı yasa gereği fotoğrafların izinsiz yayınlanması ve kullanılması kesinlikle yasaktır.

ÜRÜN KODU Order Code	KABLO KESİTİ (mm²) Cable Section (mm²)	SOKET GENİŞLİĞİ Socket Size	BOYUTLAR Dimensions d1	d4	a	c	b	L	RENK Color	KUTU ADEDİ Box Pcs.	KUTU AĞIRLIĞI Box Weight	ADET FİYATI TL Unit Price TL	KUTU FİYATI TL Box Price TL
SP-FE/1288	0,5-1,5	0,8X2,8	1,7	4,3	10,0	6,5	2,8	17,7	Kırmızı	250	~ 0,1 kg.	0,120	30,00
SP-FE/1488	0,5-1,5	0,8X4,75	1,7	4,3	10,0	6,7	4,75	20,0	Kırmızı	250	~ 0,2 kg.	0,150	37,50
SP-FE/1638	0,5-1,5	0,8X6,35	1,7	4,3	10,0	7,7	6,35	21,0	Kırmızı	150	~ 0,1 kg.	0,180	27,00
SP-FE/2488	1,5-2,5	0,8X4,75	2,3	4,3	10,0	6,7	4,75	20,0	Mavi	250	~ 0,2 kg.	0,180	45,00
SP-FE/2638	1,5-2,5	0,8X6,35	2,3	4,3	10,0	7,7	6,35	21,0	Mavi	150	~ 0,1 kg.	0,200	30,00
SP-FE/5638	4-6	0,8X6,35	3,4	5,7	13,0	7,7	6,35	25,0	Sarı	100	~ 0,1 kg.	0,280	28,00

SP-FE Özellikleri

Hammadde Material	:	**Pirinç** Brass
Kaplama Coating	:	**Kalay** Tin Plated
İzolasyon Insulation	:	**PVC** PVC

SP-IFD

TAM İZOLELİ DİŞİ FASTON TİP KABLO UÇLARI
INSULATED RECEPTACLES

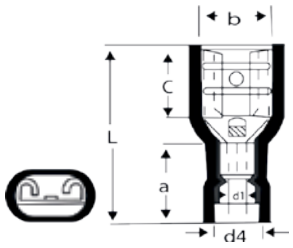

*5846 sayılı yasa gereği fotoğrafların izinsiz yayınlanması ve kullanılması kesinlikle yasaktır.

ÜRÜN KODU Order Code	KABLO KESİTİ (mm²) Cable Section (mm²)	SOKET GENİŞLİĞİ Socket Size	BOYUTLAR Dimensions d1	d4	a	c	b	L	RENK Color	KUTU ADEDİ Box Pcs.	KUTU AĞIRLIĞI Box Weight	ADET FİYATI TL Unit Price TL	KUTU FİYATI TL Box Price TL
SP-IFD/1488-5	0,5-1,5	0,5X4,75	1,7	3,8	10,5	6,4	5,6	20,0	Kırmızı	100	~ 0,1 kg.	0,200	20,00
SP-IFD/1488	0,5-1,5	0,8X4,75	1,7	3,8	10,5	6,4	5,6	20,0	Kırmızı	100	~ 0,1 kg.	0,200	20,00
SP-IFD/1638	0,5-1,5	0,8X6,35	1,7	3,8	10,5	7,5	7,4	21,5	Kırmızı	100	~ 0,2 kg.	0,240	24,00
SP-IFD/2488	1,5-2,5	0,8X4,75	2,3	4,7	10,5	6,4	5,6	20,0	Mavi	100	~ 0,1 kg.	0,200	20,00
SP-IFD/2638	1,5-2,5	0,8X6,35	2,3	4,7	10,5	7,5	7,4	21,5	Mavi	100	~ 0,2 kg.	0,220	22,00
SP-IFD/5638	4-6	0,8X6,35	3,4	6,2	12,5	7,5	7,4	25,5	Sarı	75	~ 0,1 kg.	0,300	22,50

SP-IFD Özellikleri

Hammadde Material	:	Pirinç Brass
Kaplama Coating	:	Kalay Tin Plated
İzolasyon Insulation	:	PVC PVC

SP-FEG

İZOLELİ GERİ DÖNÜŞLÜ FASTON TİP KABLO UÇLARI
INSULATED RECEPTACLES, MULTIPLE TYPE

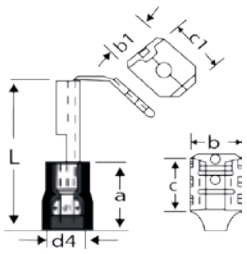

*5846 sayılı yasa gereği fotoğrafların izinsiz yayınlanması ve kullanılması kesinlikle yasaktır.

ÜRÜN KODU Order Code	KABLO KESİTİ (mm²) Cable Section (mm²)	SOKET GENİŞLİĞİ Socket Size	BOYUTLAR Dimensions d1	d4	a	c	c1	b	b1	L	RENK Color	KUTU ADEDİ Box Pcs.	KUTU AĞIRLIĞI Box Weight	ADET FİYATI TL Unit Price TL	KUTU FİYATI TL Box Price TL
SP-FEG/1638	0,5-1,5	0,8X6,35	1,7	3,8	10,0	8,0	8,2	7,4	6,35	21,5	Kırmızı	100	~ 0,1 kg.	0,260	26,00
SP-FEG/2638	0,5-2,5	0,8X6,35	2,3	4,3	10,0	8,0	8,2	7,4	6,35	21,5	Mavi	100	~ 0,2 kg.	0,270	27,00
SP-FEG/5638	4-6	0,8X6,35	3,4	5,7	13,0	8,0	8,2	7,4	6,35	25,0	Sarı	100	~ 0,2 kg.	0,340	34,00

SP-FEG Özellikleri

Hammadde Material	:	Pirinç Brass
Kaplama Coating	:	Kalay Tin Plated
İzolasyon Insulation	:	PVC PVC

RoHS 2002/95/EC

SP-ET İZOLELİ ERKEK KABLO TERMİNALLERİ
INSULATED MALE BULLET CONNECTORS

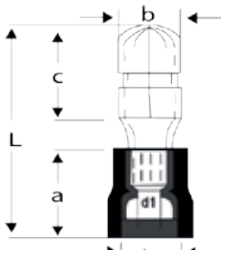

*5846 sayılı yasa gereği fotoğrafların izinsiz yayınlanması ve kullanılması kesinlikle yasaktır.

ÜRÜN KODU Order Code	KABLO KESİTİ (mm²) Cable Section (mm²)	BOYUTLAR Dimensions d1	d4	a	c	b	L	RENK Color	KUTU ADEDİ Box Pcs.	KUTU AĞIRLIĞI Box Weight	ADET FİYATI TL Unit Price TL	KUTU FİYATI TL Box Price TL
SP-ET/1040	0,5-1,5	1,7	3,8	10,0	11,0	4,0	21,0	Kırmızı	200	~ 0,2 kg.	0,150	30,00
SP-ET/2040	1,5-2,5	2,3	4,7	10,0	11,0	4,0	21,0	Mavi	200	~ 0,2 kg.	0,160	32,00
SP-ET/2050	1,5-2,5	2,3	4,7	10,0	11,0	5,0	21,0	Mavi	200	~ 0,2 kg.	0,170	34,00
SP-ET/5050	4-6	3,4	6,2	13,0	12,0	5,0	25,0	Sarı	100	~ 0,1 kg.	0,220	22,00

ET Özellikleri

Hammadde Material	:	Pirinç Brass
Kaplama Coating	:	Kalay Tin Plated
İzolasyon Insulation	:	PVC PVC

SP-DT İZOLELİ ERKEK KABLO TERMİNALLERİ
INSULATED MALE BULLET CONNECTORS

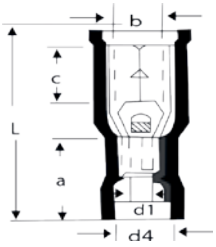

*5846 sayılı yasa gereği fotoğrafların izinsiz yayınlanması ve kullanılması kesinlikle yasaktır.

ÜRÜN KODU Order Code	KABLO KESİTİ (mm²) Cable Section (mm²)	BOYUTLAR Dimensions d1	d4	a	c	b	L	RENK Color	KUTU ADEDİ Box Pcs.	KUTU AĞIRLIĞI Box Weight	ADET FİYATI TL Unit Price TL	KUTU FİYATI TL Box Price TL
SP-DT/1040	0,5-1,5	1,7	3,8	10,5	7,0	4,0	24,5	Kırmızı	100	~ 0,2 kg.	0,200	20,00
SP-DT/2040	1,5-2,5	2,3	4,7	10,5	7,0	4,0	24,5	Mavi	100	~ 0,2 kg.	0,210	21,00
SP-DT/2050	1,5-2,5	2,3	4,7	10,5	7,0	5,0	25,5	Mavi	100	~ 0,2 kg.	0,220	22,00
SP-DT/5050	4-6	3,4	6,2	10,5	7,0	5,0	29,5	Sarı	100	~ 0,2 kg.	0,320	32,00

SP-DT Özellikleri

Hammadde Material	:	Pirinç Brass
Kaplama Coating	:	Kalay Tin Plated
İzolasyon Insulation	:	PVC PVC

TÜV RoHS 2002/95/EC

SP-IEM

İZOLELİ EK MUFLARI
INSULATED BUTT CONNECTORS

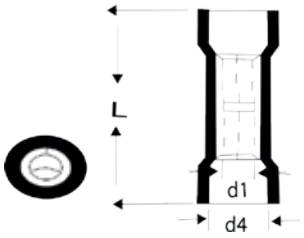

*5846 sayılı yasa gereği fotoğrafların izinsiz yayınlanması ve kullanılması kesinlikle yasaktır.

ÜRÜN KODU Order Code	KABLO KESİTİ (mm²) Cable Section (mm²)	BOYUTLAR Dimensions d1	d4	L	RENK Color	KUTU ADEDİ Box Pcs.	KUTU AĞIRLIĞI Box Weight	ADET FİYATI TL Unit Price TL	KUTU FİYATI TL Box Price TL
SP-IEM/251	0,5-1,5	1,7	4,0	25,0	Kırmızı	150	~ 0,1 kg.	0,160	24,00
SP-IEM/252	1,5-2,5	2,3	4,9	16,0	Mavi	150	~ 0,3 kg.	0,180	27,00
SP-IEM/256	4-6	3,6	6,7	20,5	Sarı	100	~ 0,2 kg.	0,330	33,00

SP-IEM Özellikleri

Hammadde Material	:	Pirinç Brass
Kaplama Coating	:	Kalay Tin Plated
İzolasyon Insulation	:	PVC PVC

SP-IBU

İZOLELİ BIÇAK TİP KABLO UÇLARI
INSULATED BLADE TYPE TERMINALS

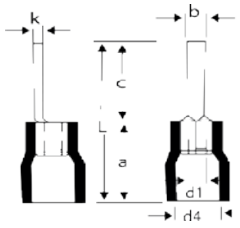

*5846 sayılı yasa gereği fotoğrafların izinsiz yayınlanması ve kullanılması kesinlikle yasaktır.

ÜRÜN KODU Order Code	KABLO KESİTİ (mm²) Cable Section (mm²)	BOYUTLAR Dimensions d1	d4	a	c	b	L	K	RENK Color	KUTU ADEDİ Box Pcs.	KUTU AĞIRLIĞI Box Weight	ADET FİYATI TL Unit Price TL	KUTU FİYATI TL Box Price TL
SP-IBU/101-14	0,5-1,5	1,7	3,8	10,0	14,0	3	24,0	0,75	Kırmızı	200	~ 0,2 kg.	0,180	36,00
SP-IBU/102-18	1,5-2,5	2,3	4,9	10,0	18,0	2,2	28,0	0,75	Mavi	200	~ 0,2 kg.	0,230	46,00

SP-IBU Özellikleri

Hammadde Material	:	Pirinç Brass
Kaplama Coating	:	Kalay Tin Plated
İzolasyon Insulation	:	PVC PVC

KSP Mekanik Sıkma Pensesi
Mechanic Crimping Tool

ÜRÜN KODU Order Code	SIKMA KAPASİTESİ Crimping Capacity	AĞIRLIK Weight	BOY Length	SIKMA FORMU Crimping Form	FİYATI TL/Ad. Unit Price TL
KSP-50	6 - 50 mm²	1,250 kg	375 mm	Altıgen Sıkma	195,00
KSP-85	10 - 120 mm²	3,530 kg	610 mm	Altıgen Sıkma	310,00
KSP-150	16 - 150 mm²	3,420 kg	650 mm	Altıgen Sıkma	320,00
KSP-240	120 - 240 mm²	4,450 kg	950 mm	Nokta Sıkma	640,00

*Standart tip bakır kablo pabuçlarını sıkar.
*Crimping tool for standard type copper cable lugs.

ÜRÜN KODU Order Code	SIKMA KAPASİTESİ Crimping Capacity	AĞIRLIK Weight	BOY Length	SIKMA FORMU Crimping Form	FİYATI TL/Ad. Unit Price TL
KSP-10/150	10 - 150 mm²	3,665 kg	605 mm	MW Sıkma Altıgen Sıkma	900,00

*Standart tip bakır kablo pabuçlarını sıkar. **Taşıma çantası dahil değildir.
*Crimping tool for standard type copper cable lugs. **Carrying case is not included.

ÜRÜN KODU Order Code	SIKMA KAPASİTESİ Crimping Capacity	AĞIRLIK Weight	BOY Length	SIKMA FORMU Crimping Form	FİYATI TL/Ad. Unit Price TL
KSP-10/240	10 - 240 mm²	9,600 kg	800 mm	MW Sıkma Altıgen Sıkma	1.150,00
KSP-10/300	10 - 300 mm²	9,700 kg	800 mm	MW Sıkma Altıgen Sıkma	1.220,00

*Standart tip bakır kablo pabuçlarını sıkar. ** KSP-10/240 ve KSP-10/300için taşıma çantası dahildir.
*Crimping tool for standard type copper cable lugs. **Carrying case is included for KSP-10/240 ve KSP-10/300.

AL-KSP Mekanik Sıkma Pensesi
Mechanic Crimping Tool

ÜRÜN KODU Order Code	SIKMA KAPASİTESİ Crimping Capacity	AĞIRLIK Weight	BOY Length	SIKMA FORMU Crimping Form	FİYATI TL/Ad. Unit Price TL
AL-KSP-10/240	10 - 240 mm² (AL)	9,700 kg	800 mm	MW Sıkma Altıgen Sıkma	1.350,00
AL-KSP-10/300	10 - 300 mm² (AL)	9,800 kg	800 mm	MW Sıkma Altıgen Sıkma	1.420,00

*Standart tip ALÜMİNYUM kablo pabuçlarını sıkar. **AL-KSP-10/240 ve AL-KSP-10/300 için taşıma çantası dahildir.
*Crimping tool for standard type copper cable lugs. **Carrying case is included for AL-KSP-10/240 ve AL-KSP-10/300

**** KSP-10/150, KSP-10/240, KSP-10/300, AL-KSP-10/240 ve AL-KSP-10/300 için standart olarak MW sıkma kalıpları ile sevk edilir. Altıgen kalıp için siparişte mutlaka belirtilmelidir.**

HSP Hidrolik Çift El Pabuç Sıkma Pensesi

ÜRÜN KODU Order Code	SIKMA KAPASİTESİ Crimping Capacity	SIKMA KUVVETİ Crimping Force	ÇALIŞMA SICAKLIĞI Operating Temperature	AĞIRLIK Weight	BOY Length	FİYATI TL/Ad. Unit Price TL
HSP-240	10 - 240 mm²	57 kN	-20, +40˚C	8,150 kg	500 mm	2.100,00
HSP-300	10 - 300 mm²	60 kN	-20, +40˚C	9,100 kg	560 mm	2.300,00

*360˚ döner sıkma başlığı. *Basınç ayar sınırlayıcıdır. *Standart tip bakır kablo pabuçlarını sıkar. *Sıkma kalıpları ve taşıma çantası dahildir.

*360º rotating crimping cap. * Crimping tool for standart type copper cable lugs. *Crimping dies and carrying case are included.

ÜRÜN KODU Order Code	SIKMA KAPASİTESİ Crimping Capacity	SIKMA KUVVETİ Crimping Force	ÇALIŞMA SICAKLIĞI Operating Temperature	AĞIRLIK Weight	BOY Length	FİYATI TL/Ad. Unit Price TL
HSP-10/240	10 - 240 mm² Çalışma basıncı : 600 bar Max basınç : 700 bar	70 kN	-20, +40˚C	15,160 kg	2.800 mm	1.950,00
HSP-10/300	10 - 300 mm² Çalışma basıncı : 600 bar Max basınç : 700 bar	70 kN	-20, +40˚C	15,300 kg	2.800 mm	2.050,00

*360˚ döner sıkma başlığı. *Basınç ayar sınırlayıcıdır. *Standart tip bakır kablo pabuçlarını sıkar. *Sıkma kalıpları ve taşıma çantası dahildir.

*360º rotating crimping cap. * Crimping tool for standart type copper cable lugs. *Crimping dies and carrying case are included.

ÜRÜN KODU Order Code	SIKMA KAPASİTESİ Crimping Capacity	SIKMA KUVVETİ Crimping Force	ÇALIŞMA SICAKLIĞI Operating Temperature	AĞIRLIK Weight	BOY Length	FİYATI TL/Ad. Unit Price TL
HSP-10/240-AL1000	10 - 240 mm² Çalışma basıncı : 700 bar Max basınç : 1000 bar	100 kN	-20, +40˚C	17,180 kg	2.740 mm	2.100,00
HSP-10/300-AL1000	10 - 300 mm² Çalışma basıncı : 700 bar Max basınç : 1000 bar	100 kN	-20, +40˚C	17,320 kg	2.740 mm	2.200,00

*360˚ döner sıkma başlığı. *Basınç ayar sınırlayıcıdır. *Standart tip bakır kablo pabuçlarını sıkar. *Sıkma kalıpları ve taşıma çantası dahildir.

*360º rotating crimping cap. * Crimping tool for standart type copper cable lugs. *Crimping dies and carrying case are included.

ÜRÜN KODU Order Code	SIKMA KAPASİTESİ Crimping Capacity	SIKMA KUVVETİ Crimping Force	ÇALIŞMA SICAKLIĞI Operating Temperature	AĞIRLIK Weight	BOY Length	FİYATI TL/Ad. Unit Price TL
HSP-300CME	10 - 300 mm² Çalışma basıncı : 600 bar Max basınç : 700 bar	65 kN	-20, +40˚C	20,500 kg	2.840 mm	2.400,00

*Standart tip bakır kablo pabuçlarını sıkar,*Sıkma kalıpları, 2m hortum, sıkma başlığı ve taşıma çantası dahildir. Sıkma başlığı gerektiğinde masa üzerine sabitlenerek kullanılır.
*Crimping tool for standart type copper cable lugs. *Crimping dies, 2m hose, crimping cap and carrying case are included. *If necessary, crimping cap can be fixed on a table.

ASP Hidrolik Çift El Pabuç Sıkma Pensesi

ÜRÜN KODU Order Code	SIKMA KAPASİTESİ Crimping Capacity	SIKMA KUVVETİ Crimping Force	ÇALIŞMA SICAKLIĞI Operating Temperature	AĞIRLIK Weight	BOY Length	FİYATI TL/Ad. Unit Price TL
ASP-240	10 - 240 mm²	57 kN	-20, +40˚C	8,250 kg	500 mm	2.250,00
ASP-300	10 - 300 mm²	60 kN	-20, +40˚C	9,200 kg	560 mm	2.400,00

*360˚ döner sıkma başlığı *Basınç ayar sınırlayıcıdır. *Standart tip alüminyum kablo pabuçlarını sıkar. *Sıkma kalıpları ve taşıma çantası dahildir.

*360º rotating crimping cap. * Crimping tool for standart type aluminium cable lugs. *Crimping dies and carrying case are included.

ÜRÜN KODU Order Code	SIKMA KAPASİTESİ Crimping Capacity	SIKMA KUVVETİ Crimping Force	ÇALIŞMA SICAKLIĞI Operating Temperature	AĞIRLIK Weight	BOY Length	FİYATI TL/Ad. Unit Price TL
ASP-10/240	10 - 240 mm² Çalışma basıncı : 600 bar Max basınç : 700 bar	70 kN	-20, +40˚C	15,260 kg	2.800 mm	2.100,00
ASP-10/300	10 - 300 mm² Çalışma basıncı : 600 bar Max basınç : 700 bar	70 kN	-20, +40˚C	15,400 kg	2.800 mm	2.200,00

*Standart tip alüminyum kablo pabuçlarını sıkar. *Sıkma kalıpları, 2m hortum, sıkma başlığı ve taşıma çantası dahildir.
*Crimping tool for standart type aluminium cable lugs. *Crimping dies, 2m hose, crimping cap and carrying case are included.

ÜRÜN KODU Order Code	SIKMA KAPASİTESİ Crimping Capacity	SIKMA KUVVETİ Crimping Force	ÇALIŞMA SICAKLIĞI Operating Temperature	AĞIRLIK Weight	BOY Length	FİYATI TL/Ad. Unit Price TL
ASP-10/240-AL1000	10 - 240 mm² Çalışma basıncı : 700 bar Max basınç : 1000 bar	100 kN	-20, +40˚C	17,280 kg	2.740 mm	2.300,00
ASP-10/300-AL1000	10 - 240 mm² Çalışma basıncı : 700 bar Max basınç : 1000 bar	100 kN	-20, +40˚C	17,420 kg	2.740 mm	2.400,00

*Standart tip alüminyum kablo pabuçlarını sıkar, *Basınç ayar sınırlayıcıdır.*Sıkma kalıpları,2m hortum, sıkma başlığı ve taşıma çantası dahildir.

*Crimping tool for standart type aluminium cable lugs. *Crimping dies, 2m hose, crimping cap and carrying case are included.

ÜRÜN KODU Order Code	SIKMA KAPASİTESİ Crimping Capacity	SIKMA KUVVETİ Crimping Force	ÇALIŞMA SICAKLIĞI Operating Temperature	AĞIRLIK Weight	BOY Length	FİYATI TL/Ad. Unit Price TL
ASP-10/300-A	10 - 300 mm² Çalışma basıncı : 500 bar Max basınç : 700 bar	65 kN	-20, +40˚C	15,700 kg	2.750 mm	2.500,00

*Standart tip alüminyum kablo pabuçlarını sıkar. *Sıkma kalıpları, 2m hortum, sıkma başlığı ve taşıma çantası dahildir.

*Crimping tool for standart type aluminium cable lugs. *Crimping dies, 2m hose, crimping cap and carrying case are included.

TEKNİK BİLGİLER
TECHNICAL DATA

Kablo Pabucu ve Muflarının Sıkılması

1. Girme derinliğine göre iletkenin ucunu sıyırın (sıkılmamış ucun boy derinliğinden dolayı +%10)
2. İletken uçları montajdan önce bir bez veya fırça ile temizlenmelidir.
3. İletkeni sonuna kadar kablo pabucuna veya konnektöre sokun.
4. Sıkma yönünü izlerken uygun takımı kullanarak kablo pabucunu veya soketi sıkın.
5. Kablo pabuçları veya konnektörler için sıkma yönü aşağıdaki şekilde gösterilmektedir.
6. Sıkma işlemi tamamlandıktan sonra, kablo pabuçlarından ve sıkıştırmalı bağlantılardan çıkan fazla malzemeleri ayırın.

Assembly Instructions for Cable Lugs and Connectors

1. Strip conductor according to insertion depth (+10% because of length changing of crimped sleeve)
2. Conductor ends must be cleaned with a cloth or brush or before assembly.
3. Insert conductor fully into cable lug or connector.
4. Paying attention crimping direction, crimp the cable lug or connector using the appropriate tools. The crimping direction for cable lugs and connectors is indicated in the illustration below.
5. After crimping, wipe away excess compound forced out from aluminium cable lugs and connectors.

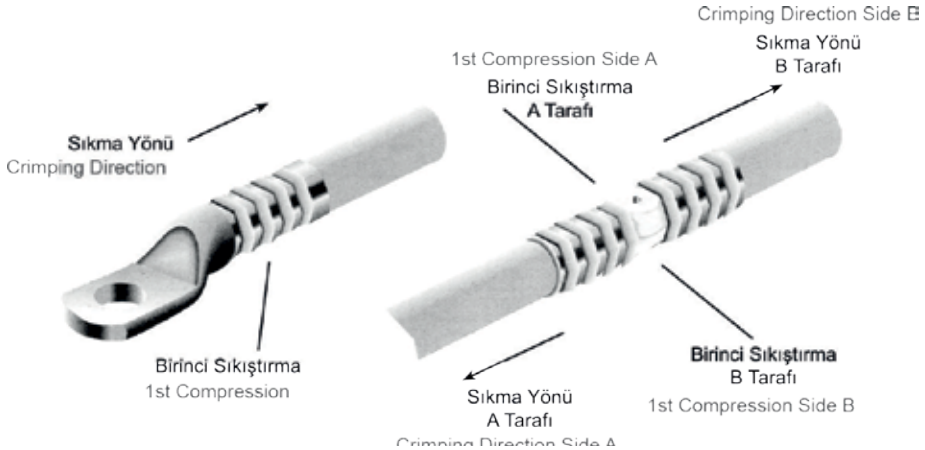

Muhtelif Kablo Pabucu Sıkma Tiplerine Ait Önerilen Sıkma Miktarları
We Recommend the Following Number of Compression for Individual Cable Sections

KABLO KESİTİ (mm²) Cable Section (mm²)	Standart SKP Kablo Pabuçları 5mm'lik Sıkma Çeneli Tubular Cable Lugs 5mm Crimping die	Geniş Sıkma Çeneleri Wide Crimping dies	DIN 46235'e uygun Kablo Pabuçları 5mm'lik Sıkma Çeneli DIN Cable Lugs 5mm Crimping die	Geniş Sıkma Çeneleri Wide Crimping dies	Alüminyum Kablo Pabuçları 7mm'lik Sıkma Çeneli Aluminium Cable Lugs 7mm Crimping die	Geniş Sıkma Çeneleri Wide Crimping dies
6	1		2			
10	1		2			
16	1	1	2	1	4	2
25	2	1	2	1	4	2
35	2	1	2	1	5	2
50	2	1	3	1	5	2
70	2	1	3	1	6	3
95	2	1	4	2	6	3
120	2	1	4	2	6	3
150	2	1	4	2	6	3
185	1	1	4	2	6	3
240	4	2	5	2	8	3
300	4	2		2	8	3
400	4	2		3		4
500				3		4
625				3		
800				3		
1000				3		

SIMPA
S-95
SIMPA
S-120
SIMPA
S-150
SIMPA
S-185
SIMPA
S-240